DCC DOCUMENT
ISSUE DATE:2021/10/26

12M– ① ② ③ ④ ⑤ ⑥

SWITCH FUNCTION CODE	SWITCH FUNCTION DESCRIPTION
A	MOMENTARY,WIRELEADS
B	MAINTAIN,WIRELEADS
E	MOMENTARY,SOLDER TERMINAL
F	MAINTAIN,SOLDER TERMINAL
G	MOMENTARY,P.C. TERMINAL
H	MAINTAIN,P.C. TERMINAL

HOUSING MATERIAL CODE	HOUSING DECSRIPTION
1	STAINLESS STEEL, NATURAL
2	ZINC ALLOY,VELOUR CHROME PLATED
K	ALUMINUM ANODIZED BLACK
R	ALUMINUM ANODIZED RED
S	ALUMINUM, ANODIZED SILVER

BUTTON COLOR CODE	BUTTON COLOR DESCRIPTION
1	STAINLESS STEEL, NATURAL

BUTTON TYPE CODE	BUTTON TYPE DESCRIPTION
2	FLAT BUTTON ,RING (ONLY FOR MOMENTARY)
H	RAISED BUTTON ,RING

LED COLOR CODE	LED COLOR
N	NONE
R	RED
A	AMBER
Y	YELLOW
B	BLUE
G	GREEN
W	WHITE
RB	RED/BLUE
RG	RED/GREEN

LED INLET VOLTAGE CODE		LED INLET VOLTAGE
NON-WIRELEADS	IF BLANK	FOLLOW LED SPECIFICATION
	05	5V (SEE NOTE 4)
WIRELEADS	IF BLANK	FOLLOW LED SPECIFICATION
	05	5V(SEE NOTE 4)
	12	12V
	24	24V

MECHANICAL CHARACTERISTICS:

SWITCH CIRCUITRY: SPST-NO-DB (CONTACT FORM X)
SWITCH ACTION: MOMENTARY/MAINTAINED (PER CHART)
BUTTON TRAVEL: 2.4mm [.094 INCH]NOMINAL
OPERATING FORCE: 2N [204g] NOMINAL
PANEL THICKNESS: 1.0 - 6.0mm [.039 - .236]
SWITCH CONTACTS: GOLD PLATED
NUT TORQUE FORCE: MAX 6 kgf-cm [5.2 LB-in]

ENVIROMENTAL SPECIFICATIONS:
ACTUATOR INGRESS PROTECTION: IP67
OPERATING TEMPERATURE:
MOMENTARY: -40°C to +85°C [-40°F to +185°F]
MAINTAINED :-40°C to +65°C [-40°F to +149°F]

ELECTRICAL LIFE:
MOMENTARY:10mA@12VDC, 1,000K CYCLES NOMINAL
MAINTAINED :10mA@12VDC, 50K CYCLES NOMINAL

ELECTRICAL SPECIFICATIONS:
DIELECTRIC STRENGTH: 1,000VAC
INSULATION RESISTANCE: 1G OHM
CONTACT RESISTANCE:
50m/250m OHMS MAX INITIAL(NON-WIRELEADS/WIRELEADS)

LED SPECIFICATIONS:
SEE LED SPECIFICATION

NOTE
1. CURRENT LIMITING RESISTOR IS REQUIRED TO LIMIT LED FORWARD CURRENT TO 20mA.
2. SUPPLY HEX NUT AND SEALING WASHER ARE BULK PACKED.
3. ONLY ZINC ALLOY HOUSING TYPE HAVE FLAT SIDE.
4. INNER RESISTOR ONLY FOR LED :RED / BLUE / GREEN / WHITE

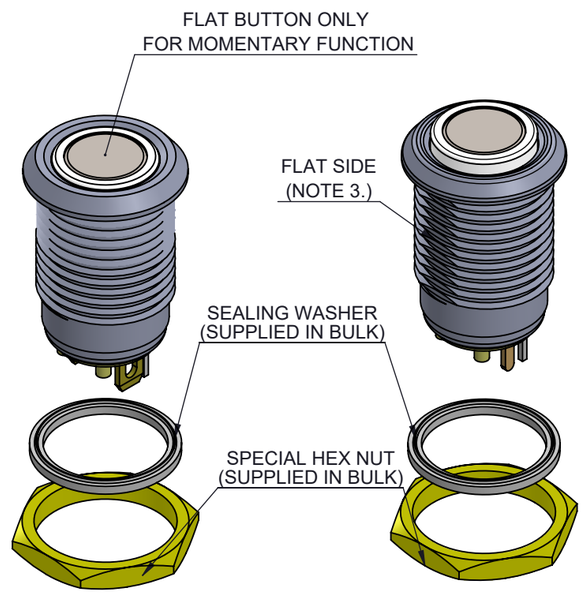

LED SPECIFICATION

LED CODE	LED SINGLE COLOR	Vf(VDC) TYP.	If (mA)	CIRCUITRY
R	RED	2.0	20	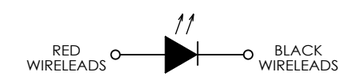
A	AMBER	2.0	20	
Y	YELLOW	2.0	20	
G	GREEN	3.0	20	
B	BLUE	3.1	20	
W	WHITE	3.3	20	

LED CODE	BICOLOR LED COLOR1	BICOLOR LED COLOR2	Vf(VDC) TYP.	If (mA)	CIRCUITRY
RB	RED	BLUE	2.0(RED) 3.3(BLUE)	20	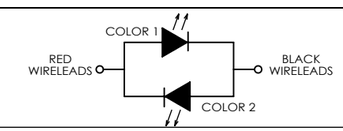
RG	RED	GREEN	2.0(RED) 3.4(GREEN)	20	

Notes:
Hand Soldering Temperature (4mmabove from Body) : 320℃ for 3 seconds

WIRELEADS SPECIFICATION

WIRELEADS TYPE	WIRELEADS SPECIFICATION	SW TERMINAL /	SW TERMINAL O	LED +	LED -
ILLUMINATION	AWG26 / UL1007	BLUE	BLUE	RED	BLACK
NON-ILLUMINATION		BLUE	BLUE	--	--

DWG TYPE SALES DRAWING	DRAWN K.Y.	TOLERANCES: UNLESS OTHERWISE NOTED X.X ± 0.5 X.XX ± 0.2 ANGULAR ± 1°	DWG TITLE 12M-MECHANICAL MOMENTARY/MAINTAINED, SOLD./P.C. TERMINAL, WIRELEADS, RING ILLUMINATION
STATUS RELEASE	REVIEW		DWG NO. 12M-A,B,E,F,G,H
This document is the intellectual property of ITW Electronic Business Asia Co., Limited and may contain confidential, proprietary, privileged information protected by law. Neither this document nor any information it contains can be reproduced, transformed to any other format, or distributed, without written permission by ITW Electronic Business Asia Co., Limited. 本文件為安天德百電股份有限公司之智慧財產，非經許可不得擷取、複製、轉變成其他形式使用或散佈	APPROVED v.w.	THIRD ANGLE PROJECTION	
	DATE 2017/12/29	REF: ---	■ 管制文件 ☐ 非管制文件 / Unit mm / SCALE 2:1 / REV 5

ITW SWITCH LUMEX®

RoHS Compliant

SHEET 1 OF 3

DCC DOCUMENT
ISSUE DATE:2021/10/26

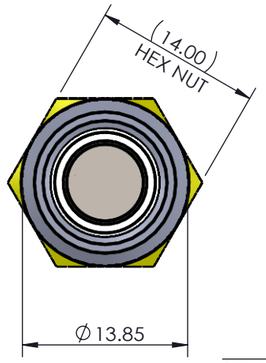

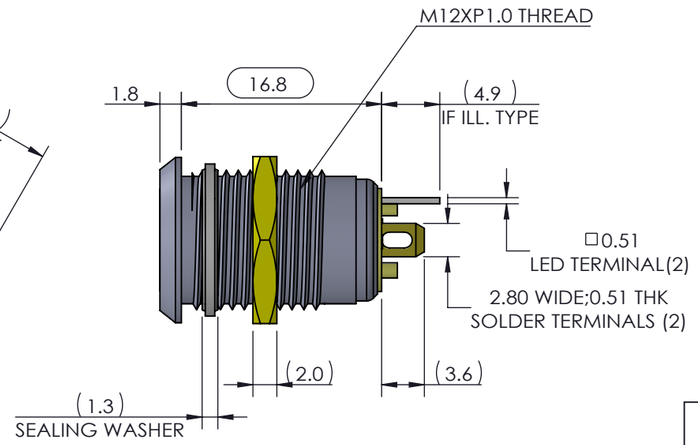

NONE ILLUMINATION WIRELEADS

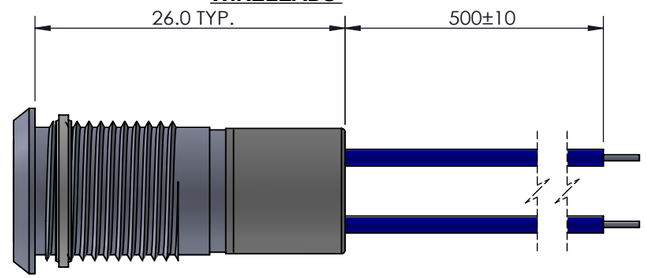

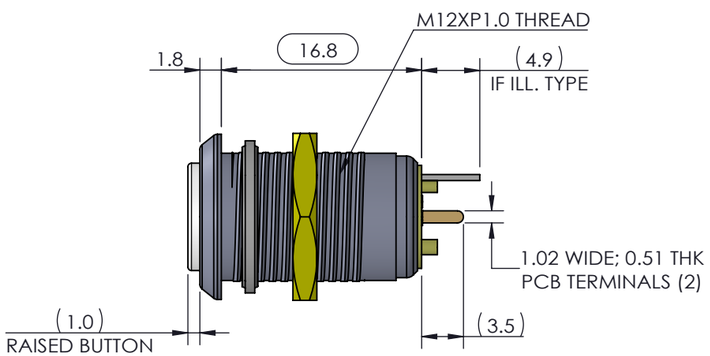

ILLUMINATION WIRELEADS

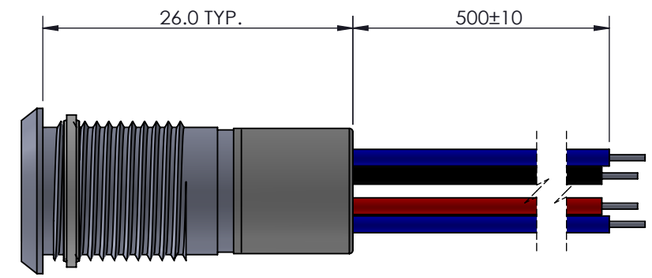

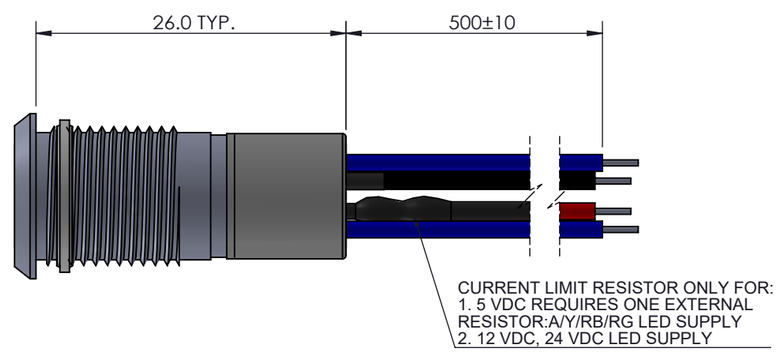

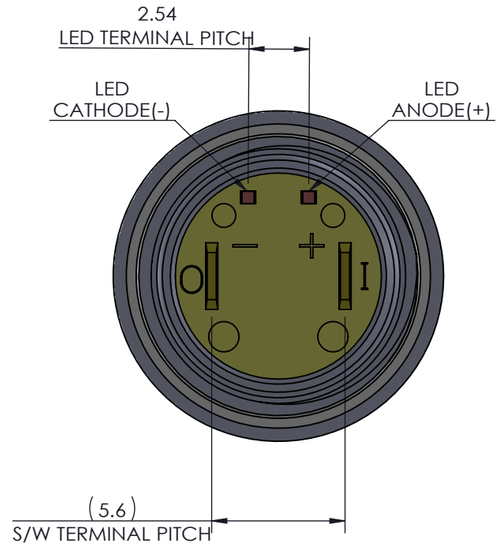

DETAIL FOR TERMINAL POSITION
SCALE 4:1

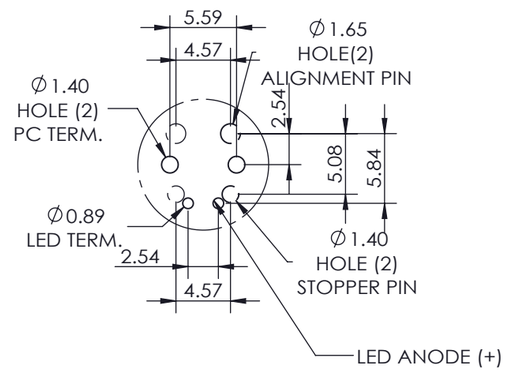

RECOMMENDED P.C. BOARD HOLE PATTERN
(FOR PC TERMINAL)
COMPONENT SIDE

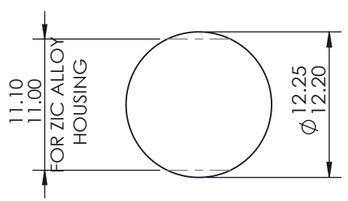

RECOMMENDED PANEL CUT-OUT

DWG TYPE SALES DRAWING	DRAWN K.Y.	TOLERANCES: UNLESS OTHERWISE NOTED X.X ± 0.5 X.XX ± 0.2 ANGULAR ± 1°	DWG TITLE 12M-MECHANICAL MOMENTARY/MAINTAINED, SOLD./P.C. TERMINAL, WIRELEADS, RING ILLUMINATION				ITW SWITCH LUMEX
STATUS RELEASE	REVIEW						
This document is the intellectual property of ITW Electronic Business Asia Co., Limited and may contain confidential, proprietary, privileged information protected by law. Neither this document nor any information it contains can be reproduced, transformed to any other format, or distributed, without written permission by ITW Electronic Business Asia Co., Limited. 本文件為亞天德百電股份有限公司之智慧財產，非經許可不得擷取、複製、轉變成其他形式使用或散佈	APPROVED V.W.	THIRD ANGLE PROJECTION	DWG NO. 12M-A,B,E,F,G,H				
	DATE 2017/12/29	REF: ---	■ 管制文件 □ 非管制文件	Unit mm	SCALE 2:1	REV 5	RoHS Compliant / SHEET 2 OF 3