DATE	REVISIONS	REV
10-13-97	E.C.N. #10BRDR./	A

UNDER REVISION

DRAWING NUMBER	REV
IFL-NW514080	A

ELECTRICAL SPECIFICATIONS

OPERATING VOLTAGE	14
OPERATING CURRENT	80 mA
RATED INTENSITY	.30 M.S.C.P.
RATED LIFE, AVE @ 14V (HRS)	50,000 HRS
FILAMENT SHAPE:	C-2F

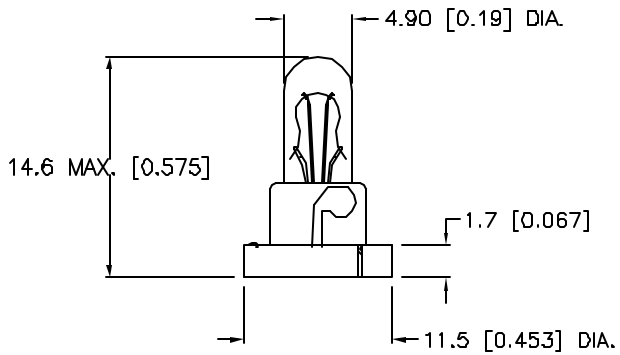

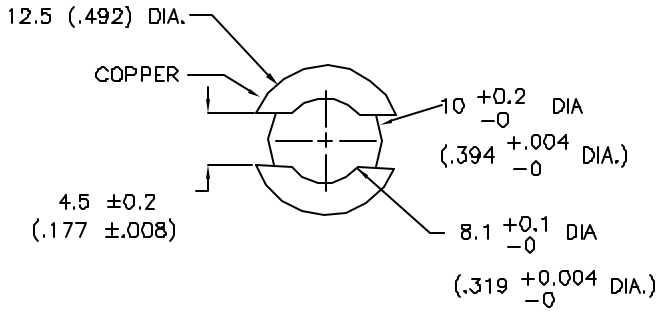

RECOMMENDED PANEL CUT-OUT

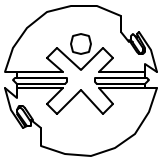

LUMEX INCORPORATED
290 E. HELLEN ROAD
PALATINE, ILLINOIS 60067
(847) 359-2790

CONFIDENTIAL INFORMATION
THE INFORMATION CONTAINED IN THIS DOCUMENT IS THE PROPERTY OF LUMEX INCORPORATED. EXCEPT AS SPECIFICALLY AUTHORIZED IN WRITING BY LUMEX INCORPORATED, THE HOLDER OF THIS DOCUMENT SHALL KEEP ALL INFORMATION CONTAINED HEREIN CONFIDENTIAL AND SHALL PROTECT SAME IN WHOLE OR IN PART FROM DISCLOSURE AND DISSEMINATION TO ALL THIRD PARTIES.

DATE: 8-21-95	DWN:	CHK'D:	APPD:
SCALE: N/A			

T-1 1/2 NED WEDGE, 12.5/8 CUT-OUT

PAGE 1 OF 1	DRAWING NUMBER	REV
	IFL-NW514080	A

MS/DU