PART NUMBER	REV.
LCD-S301M32TR-FC	A

REV.	E.C.N. NUMBER AND REVISION COMMENTS	DATE
A	E.C.N. #11395.	01.30.07

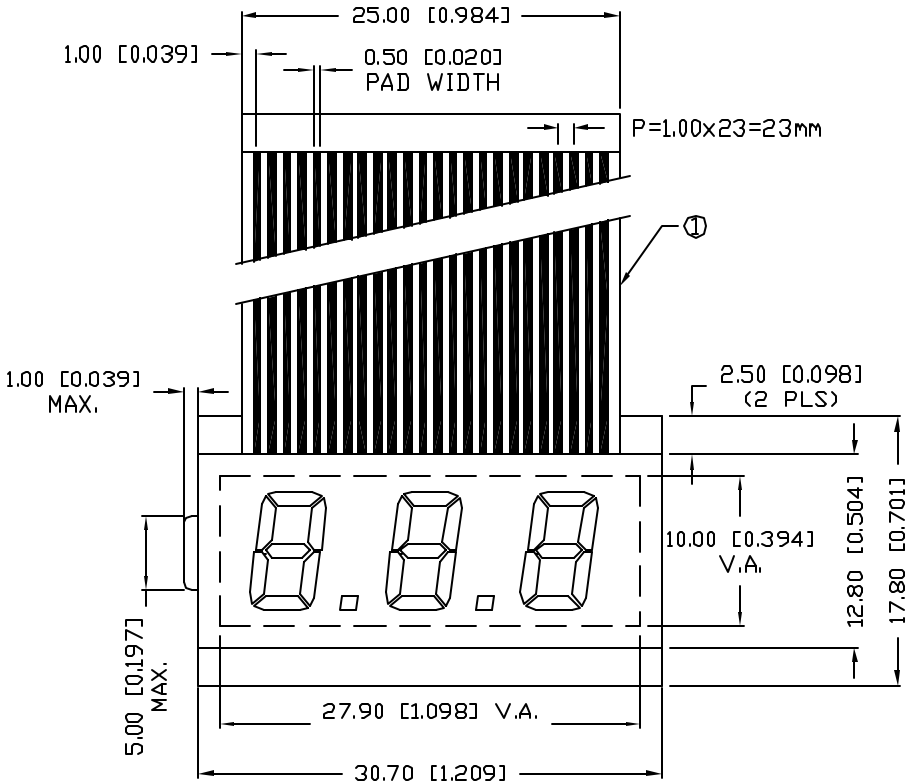

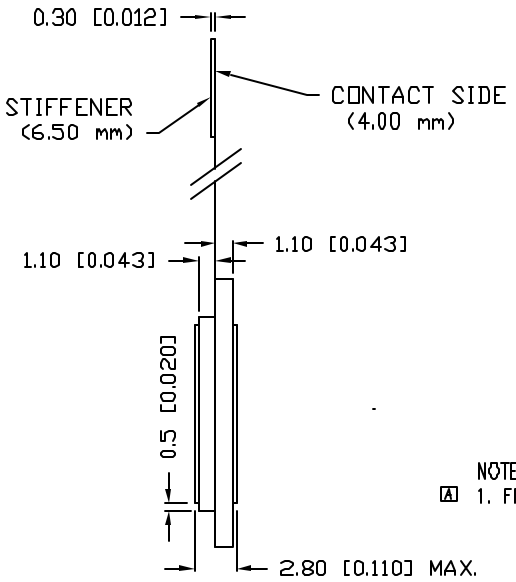

NOTES:
[A] 1. FPC CABLE 127.00 mm LONG.

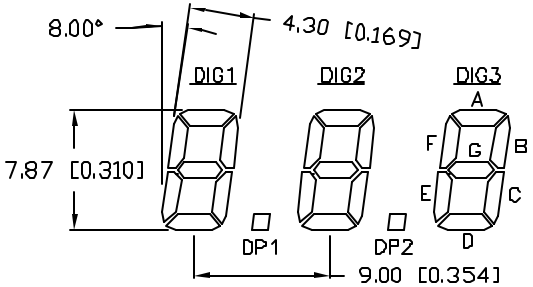

PIN NO.	1	2	3	4	5	6	7	8
SEGMENT	COM	G1	E1	F1	D1	A1	C1	B1
PIN NO.	9	10	11	12	13	14	15	16
SEGMENT	DP1	G2	E2	F2	D2	A2	C2	B2
PIN NO.	17	18	19	20	21	22	23	24
SEGMENT	DP2	G3	E3	F3	D3	A3	C3	B3

CHARACTERISTICS	
FLUID TYPE:	TN
BACKGROUND COLOR:	GRAY
VIEWING DIRECTION:	6:00
DISPLAY MODE:	REFLECTIVE
OPERATING VOLTAGE:	5.0V A.C.
OPERATING TEMP.	0°C TO 50°C
STORAGE TEMP.	-20°C TO 70°C
DRIVING METHODE:	STATIC
CONNECTION TYPE:	24 PINS

Pb

*UNLESS OTHERWISE SPECIFIED TOLERANCES PER DECIMAL PRECISION ARE: X=±1 (±0.039), X.X=±0.5 (±0.020), X.XX=±0.25 (±0.010), X.XXX=±0.127 (±0.005). LEAD SIZE=±0.05 (0.002), LEAD LENGTH=±0.75 (±0.030). MIN= +DECIMAL PRECISION −0.00 MAX.= +0.00 −DECIMAL PRECISION

REV.	PART NUMBER
A	LCD-S301M32TR-FC

0.31" CHARACTER HIEGHT, TRIPLE DIGIT LCD GLASS, TN, REFLECTIVE, FPC CABLE.

CONFIDENTIAL INFORMATION
THE INFORMATION CONTAINED IN THIS DOCUMENT IS THE PROPERTY OF LUMEX INC. EXCEPT AS SPECIFICALLY AUTHORIZED IN WRITING BY LUMEX INC., THE HOLDER OF THIS DOCUMENT SHALL KEEP ALL INFORMATION CONTAINED HEREIN CONFIDENTIAL AND SHALL PROTECT SAME IN WHOLE OR IN PART FROM DISCLOSURE AND DISSEMINATION TO ALL THIRD PARTIES.

RELIABILITY NOTE
OUR MANY YEARS OF EXPERIENCE DATA ACCUMULATION INDICATE THAT SOLDER HEAT IS A MAJOR CAUSE OF EARLY AND FUTURE FAILURE. PLEASE PAY ATTENTION TO YOUR SOLDERING PROCESS.

LUMEX INCORPORATED
290 E. HELLEN ROAD
PALATINE, ILLINOIS 60067
PHONE: 1-847-359-2790
WEB: HTTP://WWW.LUMEX.COM

DRAWN BY:	CHECKED BY:	APPROVED BY:	DATE: 12.08.06
JC			PAGE: 1 OF 1
			SCALE: N/A