UNCONTROLLED DOCUMENT

PART NUMBER	REV.
LCD-UH3X1M40TF-1	A

REV.	E.C.N. NUMBER AND REVISION COMMENTS	DATE
A	E.C.N. #11148.	02.09.07

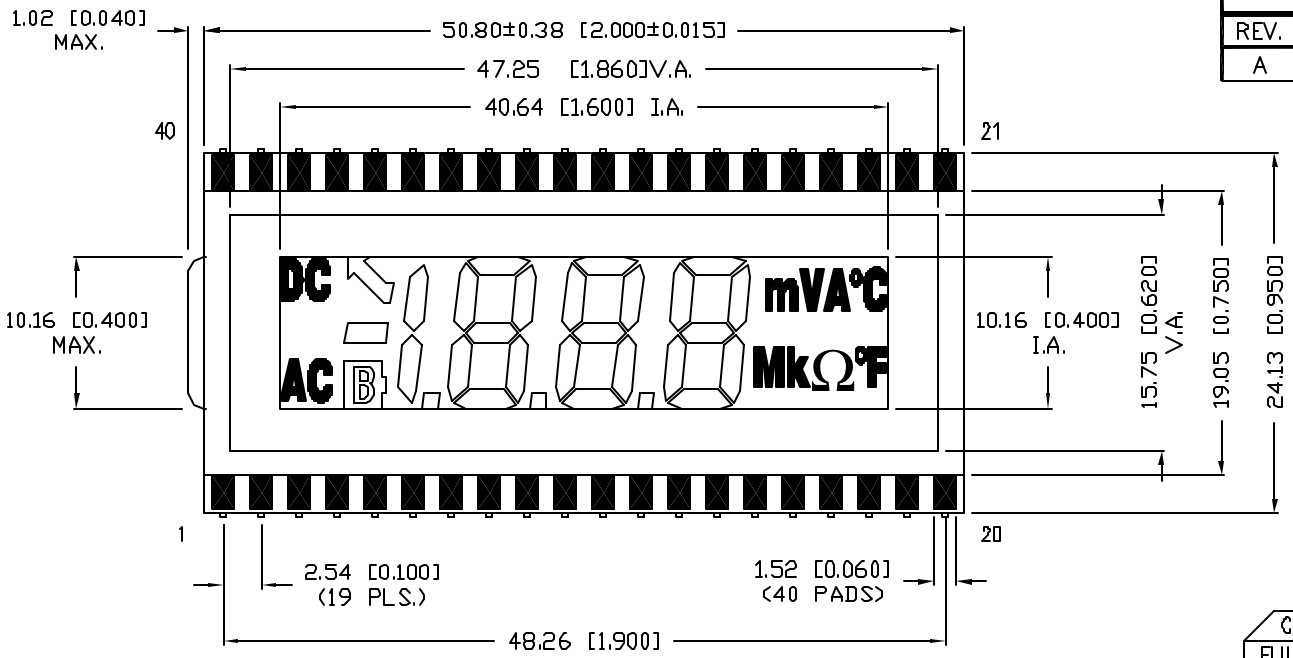

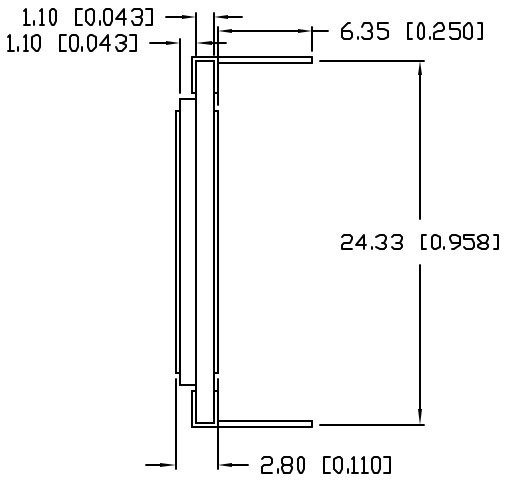

CHARACTERISTICS	
FLUID TYPE	TN
BACKGROUND COLOR	GRAY
VIEWING DIRECTION	12:00
DISPLAY MODE	TRANSFLECTIVE
OPERATING VOLTAGE	5.0V A.C.
OPERATING TEMP.	-40°C TO 80°C
STORAGE TEMP.	-40°C TO 80°C
DRIVING METHOD	STATIC
CONNECTION TYPE	40 PINS

DIGIT DETAIL

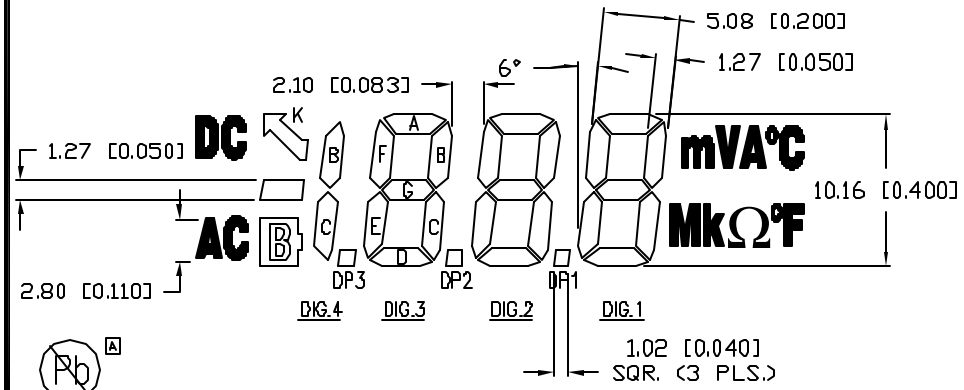

PIN NO.	1	2	3	4	5	6	7	8	9	10	11	12	13	14	15	16	17	18	19	20
SEGMENT	BP	NC	AC	BAT	B4C4	DP3	E3	D3	C3	DP2	E2	D2	C2	DP1	E1	D1	C1	M	k	Ω
PIN NO.	21	22	23	24	25	26	27	28	29	30	31	32	33	34	35	36	37	38	39	40
SEGMENT	°F	°C	A	V	m	B1	A1	F1	G1	B2	A2	F2	G2	B3	A3	F3	G3	K	-	DC

UNCONTROLLED DOCUMENT

*UNLESS OTHERWISE SPECIFIED TOLERANCES PER DECIMAL PRECISION ARE: X=±1 (±0.039), X.X=±0.5 (±0.020), X.XX=±0.25 (±0.010), X.XXX=±0.127 (±0.005). LEAD SIZE=±0.05 (±0.002), LEAD LENGTH=±0.75 (±0.030). MIN= +DECIMAL PRECISION -0.00 MAX.= +0.00 -DECIMAL PRECISION

REV.	PART NUMBER
A	LCD-UH3X1M40TF-1

0.40" CHARACTER HEIGHT, 3 1/2 DIGIT CUSTOM LCD PANEL, TN, TRANSFLECTIVE, 12:00 VIEW, EXTENDED OPERATING TEMP.

CONFIDENTIAL INFORMATION
THE INFORMATION CONTAINED IN THIS DOCUMENT IS THE PROPERTY OF LUMEX INC. EXCEPT AS SPECIFICALLY AUTHORIZED IN WRITING BY LUMEX INC., THE HOLDER OF THIS DOCUMENT SHALL KEEP ALL INFORMATION CONTAINED HEREIN CONFIDENTIAL AND SHALL PROTECT SAME IN WHOLE OR IN PART FROM DISCLOSURE AND DISSEMINATION TO ALL THIRD PARTIES.

RELIABILITY NOTE
OUR MANY YEARS OF EXPERIENCE DATA ACCUMULATION INDICATE THAT SOLDER HEAT IS A MAJOR CAUSE OF EARLY AND FUTURE FAILURE. PLEASE PAY ATTENTION TO YOUR SOLDERING PROCESS.

LUMEX INC.
290 E. HELEN ROAD
PALATINE, IL 60067-6976
PHONE: +1.847.359.2790
US WEB: www.lumex.com
TW WEB: www.lumex.com.tw

DRAWN BY:	CHECKED BY:	APPROVED BY:	DATE: 5.10.00
JC			PAGE: 1 OF 1
			SCALE: N/A