PART NUMBER	LCM-H12864GSF-RGB-UR	REV	B

REV	E.C.N. NUMBER AND REVISION COMMENTS	DATE
A	ECN-Lumex202000048	06.18.20
B	ECN-Lumex202000067	09.30.20

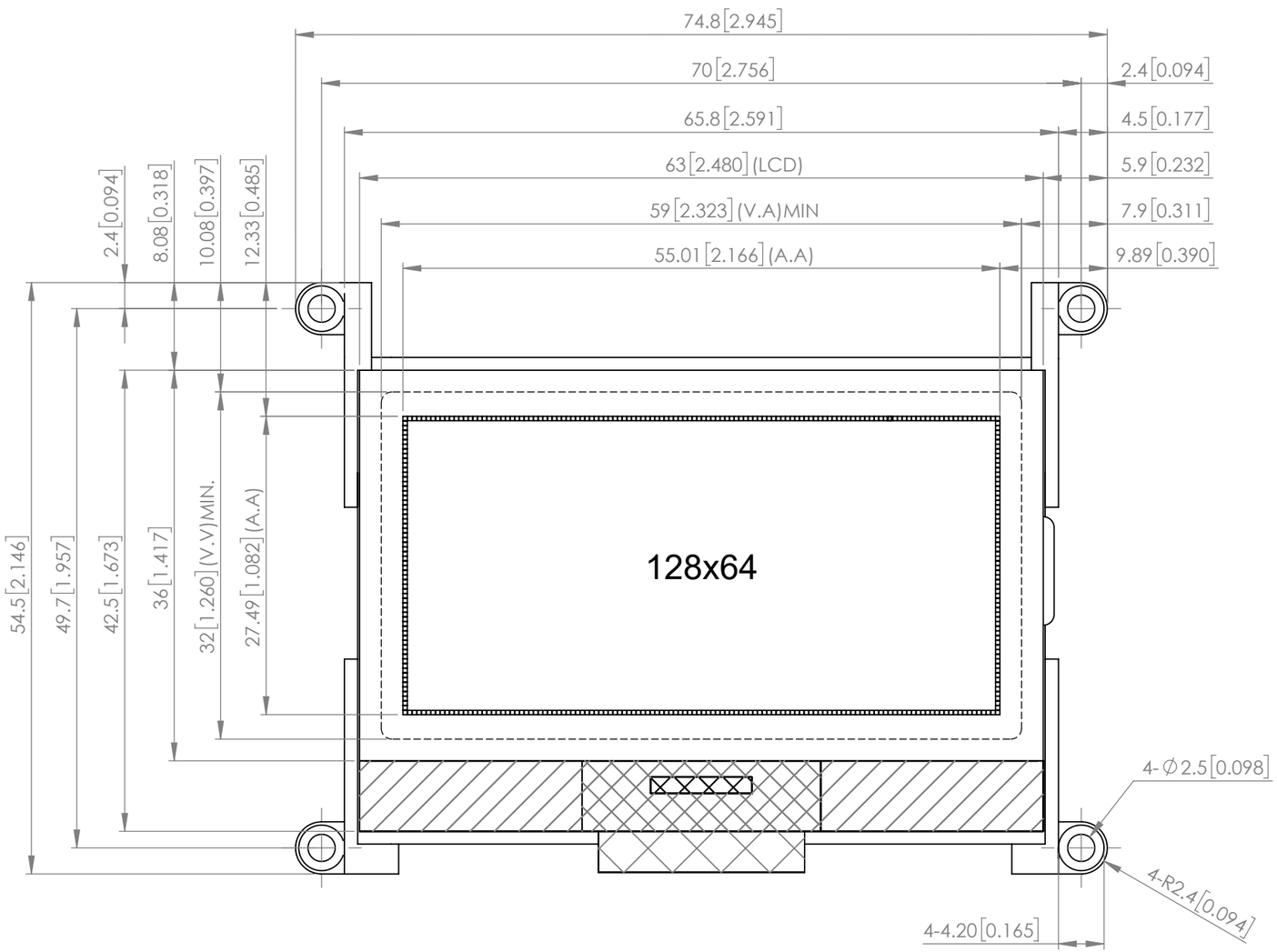

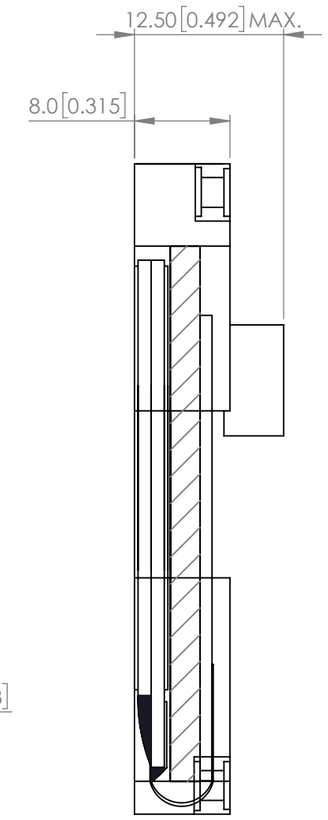

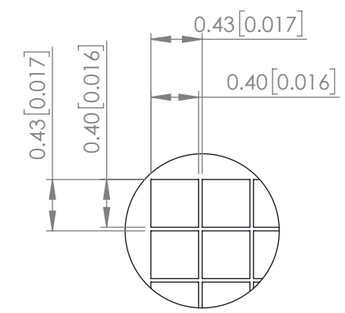

DOT DETAIL
SCALE 10:1

NOTE:
1. RoHS COMPLIANT.

*UNLESS OTHERWISE SPECIFIED TOLERANCES PER DECIMAL PRECISION ARE: X=±1 (±0.039), X.X=±0.5 (±0.020), X.XX=±0.25 (±0.010), X.XXX=±0.127 (±0.005). LEAD SIZE=±0.05 (±0.002), LEAD LENGTH=±0.75 (±0.030). MIN= +DECIMAL PRECISION -0.00 MAX.= +0.00 -DECIMAL PRECISION

LUMEX® Creating LED and LCD Solutions Together™

425 N. GARY AVE.
CAROL STREAM, IL 60188
PHONE : 800-278-5666
FAX : 630-315-2150
WEB : WWW.LUMEX.COM

74.8(W)×54.5(H)×12.5 (D)mm, 128x64 DOT MATRIX GRAPHIC LCD MODULE, FSTN, POSITIVE TRANSFLECTIVE, UART INTERFACE

****THE SPECIFICATIONS MAY CHANGE AT ANY TIME WITHOUT NOTICE.****

CONFIDENTIAL INFORMATION
THE INFORMATION CONTAINED IN THIS DOCUMENT IS THE PROPERTY OF LUMEX INC. EXCEPT AS SPECIFICALLY AUTHORIZED IN WRITING BY LUMEX INC., THE HOLDER OF THIS DOCUMENT SHALL KEEP ALL INFORMATION CONTAINED HEREIN CONFIDENTIAL AND SHALL PROTECT SAME IN WHOLE OR IN PART FROM DISCLOSURE AND DISSEMINATION TO ALL THIRD PARTIES.

DATE : 2017.12.01	DRAWN BY : K.Y.
PAGE : 1 OF 6	CHKD BY : E.C.
SCALE : NTF	APRVD BY : G.Y.
UNIT : mm [INCH]	Pb

GENERAL SPECIFICATION

ITEM	DESCRIPTION
LCD TYPE	FSTN
REAR POLARIZER	POSITIVE / TRANSFLECTIVE
BACKLIGHT TYPE	R,G,B
LCD COLOR	BLACK
TEMPERATURE RANGE	WIDE TEMP., 5V, SINGLE SUPPLY VOLTAGE
VIEWING DIRECTION	6 O'CLOCK
VIEWING AREA	59.0 (W)mm x 32.0 (H)mm
MODULE SIZE	74.8 (W)mm x 54.5 (H)mm x 12.5 (D)mm
PIXELS PITCH	0.43 x 0.43
PIXELS SIZE	0.4 x 0.4
DISPLAY FORMAT	128(W) x 64(H)
CONTROLLER INTERFACE	STM32F030C8T6 UART
BUILT-IN	WITH DC/DC CONVERTER

UART CONFIGURATION

ITEM	SETTING VALUE
BAUD RATE	115200
DATA BIT	8
STOP BIT	1
PARITY BIT	NONE
FLOW CONTROL	NONE

ABSOLUTE MAXIMUM RATING

(1) Electrical Absolute Ratings

ITEM	SYMBOL	MIN.	MAX.	UNIT
POWER SUPPLY FOR LOGIC	VDD-VSS	4.5	5.5	VOLT
BACKLIGHT LUMINANCE	Lv	35	-	cd/m^2

Note 1: All the above voltages are on the basis of “VSS” = 0V”.
Note 2: When this module is used beyond the above absolute maximum ratings, permanent breakage of the module may occur.
Note 3: Test Point Distance:500mm±50.

(2) Environmental Absolute Maximum Ratings

ITEM	WIDE TEMPERATURE			
	OPERATING		STORAGE	
	MIN.	MAX.	MIN.	MAX.
AMBIENT TEMPERATURE	-20˚C	+70˚C	-30˚C	+80˚C
HUMIDITY (WITHOUT CONDENSATION)	NOTE 1, 2		NOTE 1, 3	

Note 1: Background color changes slightly depending on ambient temperature. This phenomenon is reversible.
Note 2: Ta≦70℃: 75%RH max。
Ta>70℃: absolute humidity must be lower than the humidity of 75%RH at 70℃.
Note 3: Ta at -20℃will be <48hrs, at 80 ℃will be <120hrs when humidity is higher than 70%.

CN1 PIN ASSIGNMENT

PIN NO.	PIN OUT	LEVEL	DESCRIPTION
1	TX1	H/L	SERIAL TRANSMIT SIGNAL
2	RX1	H/L	SERIAL RECEIVE SIGNAL
3	+5V	+5V	POWER SUPPLY VOLTAGE
4	VSS	0V	POWER SUPPLY GROUND

*UNLESS OTHERWISE SPECIFIED TOLERANCES PER DECIMAL PRECISION ARE: X=±1 (±0.039), X.X=±0.5 (±0.020), X.XX=±0.25 (±0.010), X.XXX=±0.127 (±0.005). LEAD SIZE=±0.05 (±0.002), LEAD LENGTH=±0.75 (±0.030). MIN= $^{+\text{DECIMAL PRECISION}}_{-0.00}$ MAX.= $^{+0.00}_{-\text{DECIMAL PRECISION}}$

CONFIDENTIAL INFORMATION
THE INFORMATION CONTAINED IN THIS DOCUMENT IS THE PROPERTY OF LUMEX INC. EXCEPT AS SPECIFICALLY AUTHORIZED IN WRITING BY LUMEX INC., THE HOLDER OF THIS DOCUMENT SHALL KEEP ALL INFORMATION CONTAINED HEREIN CONFIDENTIAL AND SHALL PROTECT SAME IN WHOLE OR IN PART FROM DISCLOSURE AND DISSEMINATION TO ALL THIRD PARTIES.

ELECTRICAL CHARACTERISTICS

ITEM	SYMBOL	CONDITION	MIN.	TYP.	MAX.	UNIT
POWER SUPPLY FOR LOGIC	V_{DD}-V_{SS}	Ta=25˚C	4.5	5.0	5.5	VOLT
SUPPLY VOLTAGE FOR LED	V_{DD}-V_5	Ta=25˚C	8.7	9.0	9.3	VOLT
INPUT VOLTAGE	V_{IL}	L LEVEL	0	-	0.2 V_{DD}	VOLT
	V_{IH}	H LEVEL	0.8 V_{DD}	-	V_{DD}	VOLT
OUTPUT VOLTAGE	V_{OL}	L LEVEL	0	-	0.2 V_{DD}	VOLT
	V_{OH}	H LEVEL	0.8 V_{DD}	-	V_{DD}	VOLT
POWER SUPPLY CURRENT FOR LCM	I_{DD}	V_{DD}=5.0V	90.0	94.0	100.0	mA

OPTICAL CHARACTERISTICS

ITEM	SYMBOL	CONDITION	MIN.	TYP.	MAX.	UNIT
VIEW ANGLE RANGE	Φf (12 O'CLOCK)	Ta=25˚C	-	30	-	DEGREE
	Φb (12 O'CLOCK)		-	62	-	
	Φl (12 O'CLOCK)		-	52	-	
	Φr (12 O'CLOCK)		-	52	-	
RISE TIME	Tr	Ta=25˚C Φ=0˚ θ=0˚	-	82	250	mS
FALL TIME	Tf		-	196	250	
FRAME FREQUENCY	Frm		-	-	-	Hz
BRIGHTNESS	L	-	35	-	-	cd/m^2
PEAK EMISSION WAVELENGTH	R	Ta=25˚C	-	625	-	nm
	G		-	520	-	nm
	B		-	470	-	nm

*UNLESS OTHERWISE SPECIFIED TOLERANCES PER DECIMAL PRECISION ARE: X=±1 (±0.039), X.X=±0.5 (±0.020), X.XX=±0.25 (±0.010), X.XXX=±0.127 (±0.005). LEAD SIZE=±0.05 (±0.002), LEAD LENGTH=±0.75 (±0.030). MIN= $^{+\text{DECIMAL PRECISION}}_{-0.00}$ MAX.= $^{+0.00}_{-\text{DECIMAL PRECISION}}$

LUMEX® Creating LED and LCD Solutions Together™
425 N. GARY AVE.
CAROL STREAM, IL 60188
PHONE : 800-278-5666
FAX : 630-315-2150
WEB : WWW.LUMEX.COM

74.8(W)×54.5(H)×12.5 (D)mm, 128x64 DOT MATRIX GRAPHIC LCD MODULE, FSTN, POSITIVE TRANSFLECTIVE, UART INTERFACE

****THE SPECIFICATIONS MAY CHANGE AT ANY TIME WITHOUT NOTICE.****

CONFIDENTIAL INFORMATION
THE INFORMATION CONTAINED IN THIS DOCUMENT IS THE PROPERTY OF LUMEX INC. EXCEPT AS SPECIFICALLY AUTHORIZED IN WRITING BY LUMEX INC., THE HOLDER OF THIS DOCUMENT SHALL KEEP ALL INFORMATION CONTAINED HEREIN CONFIDENTIAL AND SHALL PROTECT SAME IN WHOLE OR IN PART FROM DISCLOSURE AND DISSEMINATION TO ALL THIRD PARTIES.

Definition of Angle θ & Φ

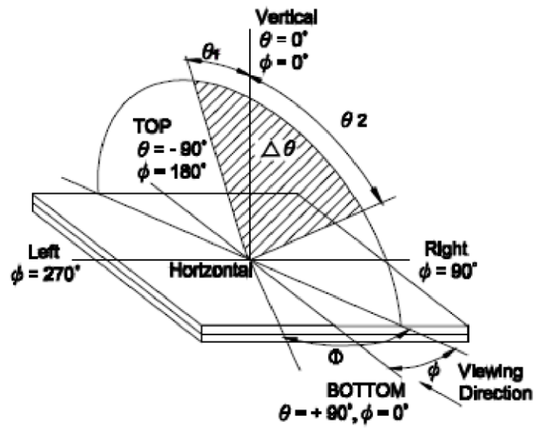

Definition of Viewing Angle θ1 & θ2

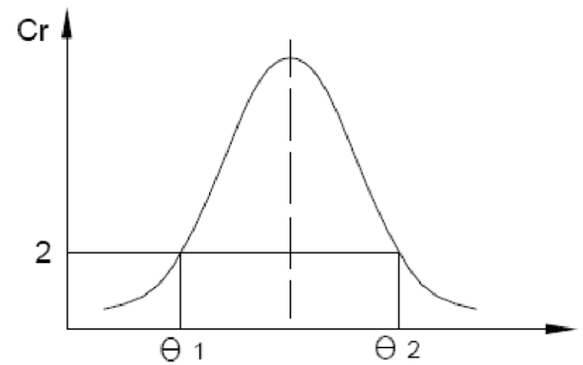

Definition of Viewing Direction

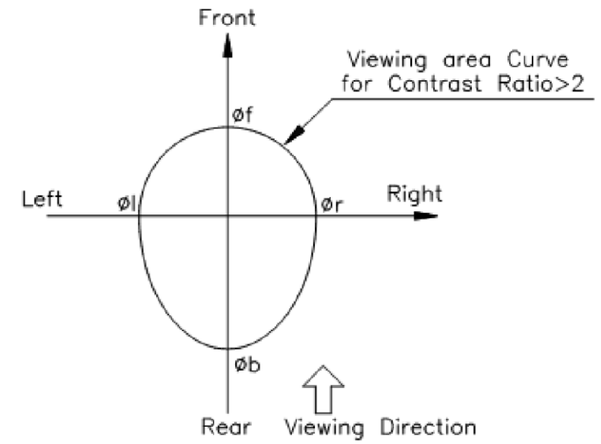

Definition of Contrast Cr

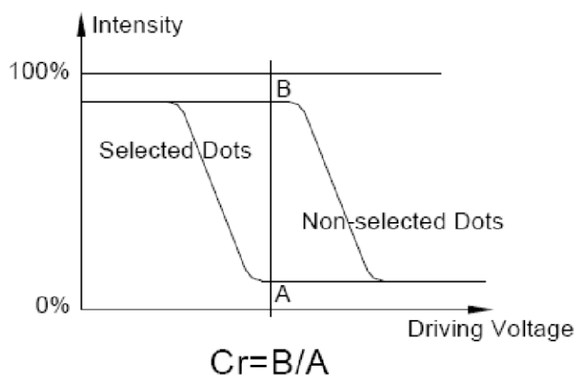

Definition of Optical Response

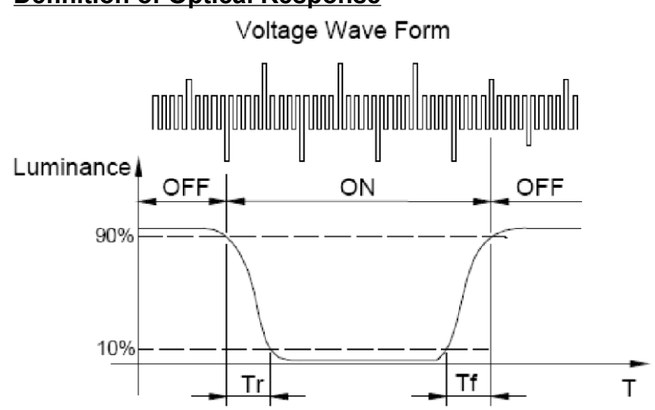

*UNLESS OTHERWISE SPECIFIED TOLERANCES PER DECIMAL PRECISION ARE: X=±1 (±0.039), X.X=±0.5 (±0.020), X.XX=±0.25 (±0.010), X.XXX=±0.127 (±0.005). LEAD SIZE=±0.05 (±0.002), LEAD LENGTH=±0.75 (±0.030). MIN= +DECIMAL PRECISION -0.00 MAX.= +0.00 -DECIMAL PRECISION

LUMEX® Creating LED and LCD Solutions Together™
425 N. GARY AVE.
CAROL STREAM, IL 60188
PHONE : 800-278-5666
FAX : 630-315-2150
WEB : WWW.LUMEX.COM

74.8(W)×54.5(H)×12.5 (D)mm, 128x64 DOT MATRIX GRAPHIC LCD MODULE, FSTN, POSITIVE TRANSFLECTIVE, UART INTERFACE

THE SPECIFICATIONS MAY CHANGE AT ANY TIME WITHOUT NOTICE.
CONFIDENTIAL INFORMATION
THE INFORMATION CONTAINED IN THIS DOCUMENT IS THE PROPERTY OF LUMEX INC. EXCEPT AS SPECIFICALLY AUTHORIZED IN WRITING BY LUMEX INC., THE HOLDER OF THIS DOCUMENT SHALL KEEP ALL INFORMATION CONTAINED HEREIN CONFIDENTIAL AND SHALL PROTECT SAME IN WHOLE OR IN PART FROM DISCLOSURE AND DISSEMINATION TO ALL THIRD PARTIES.

DIAGRAM	FUNCTION	COMMAND
	Write a 8x3 String	**at83**=(line,column,String) <example> **at83**=(0,0,ABCD1234)
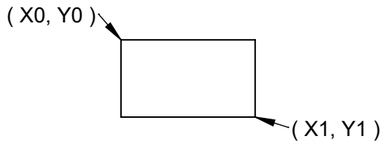	Draw a Rectangle	at**91**=(X0 position,Y0 position,X1 position,Y1 position,**0 or 1**) '1' : Positive Mode '0' : Negative Mode <example> at**91**=(0,0,55,1) : '1' positive mode
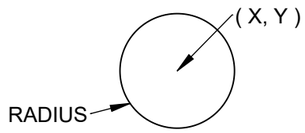	Draw a Circle	at**94**=(X position,Y position,Radius,**0 or 1**) '1' : Positive Mode '0' : Negative Mode <example> at**94**=(48,4,3,1) : '1' positive mode
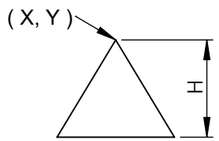	Draw a tip upward Triangle	at**96**=(X position,Y position,Height,**0 or 1**) '1' : Positive Mode '0' : Negative Mode <example> at**96**=(48,1,3,1) : '1' positive mode
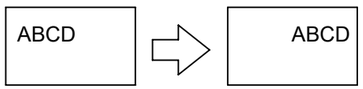 SCROLL RIGHTWARD	Scroll the whole display rightward	at**d5**=(shif time in ms) <example> at**d5**=(20)
	Backlight control (for LCM with RGB backlight)	**ated**=(Backlight **0~7**) '0' : none '1' : red color '2' : green color '3' : blue color '4' : yellow color '5' : purple color '6' : cyan color '7' : white color <example> **ated**=(7) : "7" white color

* Please refer to detail commands on Lumex website: www.lumex.com/ezdisplay

*UNLESS OTHERWISE SPECIFIED TOLERANCES PER DECIMAL PRECISION ARE: X=±1 (±0.039), X.X=±0.5 (±0.020), X.XX=±0.25 (±0.010), X.XXX=±0.127 (±0.005). LEAD SIZE=±0.05 (±0.002), LEAD LENGTH=±0.75 (±0.030). MIN=$^{+\text{DECIMAL PRECISION}}_{-0.00}$ MAX.=$^{+0.00}_{-\text{DECIMAL PRECISION}}$

LUMEX®
Creating LED and LCD Solutions Together™

425 N. GARY AVE.
CAROL STREAM, IL 60188
PHONE : 800-278-5666
FAX : 630-315-2150
WEB : WWW.LUMEX.COM

74.8(W)×54.5(H)×12.5 (D)mm, 128x64 DOT MATRIX GRAPHIC LCD MODULE, FSTN, POSITIVE TRANSFLECTIVE, UART INTERFACE

****THE SPECIFICATIONS MAY CHANGE AT ANY TIME WITHOUT NOTICE.****

CONFIDENTIAL INFORMATION
THE INFORMATION CONTAINED IN THIS DOCUMENT IS THE PROPERTY OF LUMEX INC. EXCEPT AS SPECIFICALLY AUTHORIZED IN WRITING BY LUMEX INC., THE HOLDER OF THIS DOCUMENT SHALL KEEP ALL INFORMATION CONTAINED HEREIN CONFIDENTIAL AND SHALL PROTECT SAME IN WHOLE OR IN PART FROM DISCLOSURE AND DISSEMINATION TO ALL THIRD PARTIES.

DATE : 2017.12.01	DRAWN BY : K.Y.
PAGE : 5 OF 6	CHKD BY : E.C.
SCALE : NTF	APRVD BY : G.Y.
UNIT : mm [INCH]	Pb

ASCII code of 5X7 fonts and 8X16 fonts

Hex	Symbol	Hex	Symbol	Hex	Symbol
0x20		0x40	@	0x60	`
0x21	!	0x41	A	0x61	a
0x22	"	0x42	B	0x62	b
0x23	#	0x43	C	0x63	c
0x24	$	0x44	D	0x64	d
0x25	%	0x45	E	0x65	e
0x26	&	0x46	F	0x66	f
0x27		0x47	G	0x67	g
0x28	(	0x48	H	0x68	h
0x29	)	0x49	I	0x69	i
0x2a	*	0x4a	J	0x6a	j
0x2b	+	0x4b	K	0x6b	k
0x2c	,	0x4c	L	0x6c	l
0x2d	-	0x4d	M	0x6d	m
0x2e	.	0x4e	N	0x6e	n
0x2f		0x4f	O	0x6f	o
0x30	0	0x50	P	0x70	p
0x31	1	0x51	Q	0x71	q
0x32	2	0x52	R	0x72	r
0x33	3	0x53	S	0x73	s
0x34	4	0x54	T	0x74	t
0x35	5	0x55	U	0x75	u
0x36	6	0x56	V	0x76	v
0x37	7	0x57	W	0x77	w
0x38	8	0x58	X	0x78	x
0x39	9	0x59	Y	0x79	y
0x3a	:	0x5a	Z	0x7a	z
0x3b	;	0x5b	]	0x7a	{
0x3c	<	0x5c	\	0x7a	|
0x3d	=	0x5d	[	0x7a	}
0x3e	>	0x5e	^	0x7a	~
0x3f	?	0x5f	_	0x7a	<-

ASCII code of 16X16 fonts

Hex	Symbol
0x30	0
0x31	1
0x32	2
0x33	3
0x34	4
0x35	5
0x36	6
0x37	7
0x38	8
0x39	9

No. of 8X16 pattern

No.	Symbol
0	0
1	1
2	2
3	3
4	4
5	5
6	6
7	7
8	8
9	9

No. of 32X32 pattern

No.	Symbol
0	0
1	1
2	2
3	3
4	4
5	5
6	6
7	7
8	8
9	9
10	°C
11	°F
12	✤

No. of 8X8 pattern

No.	Symbol
0	0
1	1
2	2
3	3
4	4
5	5
6	6
7	7
8	8
9	9

No. of 16X16 pattern

No.	Symbol
0	0
1	1
2	2
3	3
4	4
5	5
6	6
7	7
8	8
9	9

*UNLESS OTHERWISE SPECIFIED TOLERANCES PER DECIMAL PRECISION ARE: X=±1 (±0.039), X.X=±0.5 (±0.020), X.XX=±0.25 (±0.010), X.XXX=±0.127 (±0.005). LEAD SIZE=±0.05 (±0.002), LEAD LENGTH=±0.75 (±0.030). MIN= $^{+\text{DECIMAL PRECISION}}_{-0.00}$ MAX.= $^{+0.00}_{-\text{DECIMAL PRECISION}}$

LUMEX® Creating LED and LCD Solutions Together™
425 N. GARY AVE.
CAROL STREAM, IL 60188
PHONE : 800-278-5666
FAX : 630-315-2150
WEB : WWW.LUMEX.COM

74.8(W)×54.5(H)×12.5 (D)mm, 128x64 DOT MATRIX GRAPHIC LCD MODULE, FSTN, POSITIVE TRANSFLECTIVE, UART INTERFACE

****THE SPECIFICATIONS MAY CHANGE AT ANY TIME WITHOUT NOTICE.****

CONFIDENTIAL INFORMATION
THE INFORMATION CONTAINED IN THIS DOCUMENT IS THE PROPERTY OF LUMEX INC. EXCEPT AS SPECIFICALLY AUTHORIZED IN WRITING BY LUMEX INC., THE HOLDER OF THIS DOCUMENT SHALL KEEP ALL INFORMATION CONTAINED HEREIN CONFIDENTIAL AND SHALL PROTECT SAME IN WHOLE OR IN PART FROM DISCLOSURE AND DISSEMINATION TO ALL THIRD PARTIES.

DATE : 2017.12.01	DRAWN BY : K.Y.
PAGE : 6 OF 6	CHKD BY : E.C.
SCALE : NTF	APRVD BY : G.Y.
UNIT : mm [INCH]	Pb