PRELIMINARY

PART NUMBER	LCT-H320240M35W-G2	REV	X3
REV	E.C.N. NUMBER AND REVISION COMMENTS		DATE
X3	-		01.05.25

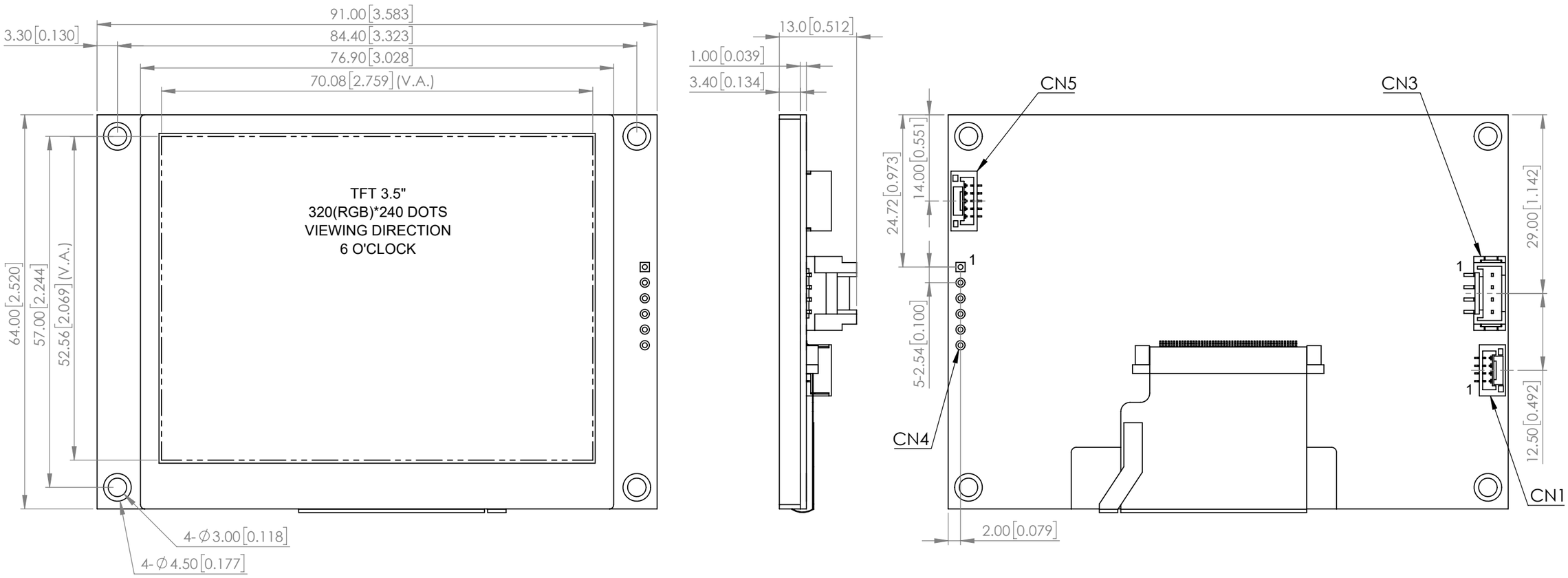

*UNLESS OTHERWISE SPECIFIED TOLERANCES PER DECIMAL PRECISION ARE: X=±1 (±0.039), X.X=±0.5 (±0.020), X.XX=±0.25 (±0.010), X.XXX=±0.127 (±0.005). LEAD SIZE=±0.05 (±0.002), LEAD LENGTH=±0.75 (±0.030). MIN= +DECIMAL PRECISION -0.00 MAX.= +0.00 -DECIMAL PRECISION

TW LUMEX® Creating LED · LCD & Switch Solutions

425 N. GARY AVE.
CAROL STREAM, IL 60188
PHONE : 800-278-5666
FAX : 630-315-2150
WEB : WWW.LUMEX.COM

3.5" IPS TFT, 90.1(W)*64.0(H)*13.0(D)mm, 320(RGB)*240 DOTS, TRANSMISSIVE/POSITIVE, CAN bus/UART/4-WIRE SPI INTERFACE.

****THE SPECIFICATIONS MAY CHANGE AT ANY TIME WITHOUT NOTICE.****

CONFIDENTIAL INFORMATION

THE INFORMATION CONTAINED IN THIS DOCUMENT IS THE PROPERTY OF LUMEX INC. EXCEPT AS SPECIFICALLY AUTHORIZED IN WRITING BY LUMEX INC., THE HOLDER OF THIS DOCUMENT SHALL KEEP ALL INFORMATION CONTAINED HEREIN CONFIDENTIAL AND SHALL PROTECT SAME IN WHOLE OR IN PART FROM DISCLOSURE AND DISSEMINATION TO ALL THIRD PARTIES.

DATE : 2024.03.18	DRAWN BY : E.C.
PAGE : 1 OF 5	CHKD BY : T.S.
SCALE : NTF	APRVD BY : --
UNIT : mm [INCH]	Pb

PIN ASSIGNMENTS:

CN1

PIN NO.	PIN OUT	LEVEL	DESCRIPTION
1	+5V	+5V	POWER SUPPLY VOLTAGE
2	CANH	H/L	CAN bus D+
3	CANL	H/L	CAN bus D-
4	GND	0V	POWER SUPPLY GROUND

CN3

PIN NO.	PIN OUT	LEVEL	DESCRIPTION
1	TXD	H/L	SERIAL TRANSMIT SIGNAL
2	RXD	H/L	SERIAL RECEIVE SIGNAL
3	+5V	+5V	POWER SUPPLY VOLTAGE
4	GND	0V	POWER SUPPLY GROUND

CN4

PIN NO.	PIN OUT	LEVEL	DESCRIPTION
1	+5V	+5V	POWER SUPPLY VOLTAGE
2	CLK	-	THIS PIN IS USED TO BE SERIAL INTERFACE CLOCK
3	MOSI	-	SPI INTERFACE INPUT PIN
4	D/C	-	DATA OR COMMAND PIN
5	/CS	-	CHIP SELECTION PIN
6	GND	0V	POWER SUPPLY GROUND

CN5

PIN NO.	PIN OUT	LEVEL	DESCRIPTION
1	+3.3V	+3.3V	POWER SUPPLY VOLTAGE
2	SW	H/L	SWITCH
3	A	H/L	ENCODE_A
4	B	H/L	ENCODE_B
5	GND	0V	POWER SUPPLY GROUND

GENERAL SPECIFICATION

ITEM	DESCRIPTION
DISPLAY TYPE	3.5" IPS TFT
MODULE DIMENSION	91.0(W)mm*64.0(H)mm*13.0(D)mm
PIXEL PITCH	0.219(W)mm*0.219(H)mm
MODULE RESOLUTION	320*240
POLARIZER MODE	TRANSMISSIVE/POSITIVE
COMMUNICATION INTERFACE	CAN bus(CN1) / UART(CN3) / 4-WIRE SPI(CN5)
FLASH MEMORY	256M bits

ABSOLUTE MAXIMUM RATINGS TA=25˚C

ITEM	SYMBOL	VALUE		UNIT
		MIN	MAX	
OPERATING CURRENT	I_{MAX}	-	250	mA
INPUT VOLTAGE	V_{in}	4.5	5.5	V
OPERATING TEMPERATURE	T_{OPR}	-20	70	℃
STORAGE TEMPERATURE	T_{STG}	-30	80	℃

*UNLESS OTHERWISE SPECIFIED TOLERANCES PER DECIMAL PRECISION ARE: X=±1 (±0.039), X.X=±0.5 (±0.020), X.XX=±0.25 (±0.010), X.XXX=±0.127 (±0.005). LEAD SIZE=±0.05 (±0.002), LEAD LENGTH=±0.75 (±0.030). MIN= $^{+\text{DECIMAL PRECISION}}_{-0.00}$ MAX.= $^{+0.00}_{-\text{DECIMAL PRECISION}}$

THE SPECIFICATIONS MAY CHANGE AT ANY TIME WITHOUT NOTICE.
CONFIDENTIAL INFORMATION
THE INFORMATION CONTAINED IN THIS DOCUMENT IS THE PROPERTY OF LUMEX INC. EXCEPT AS SPECIFICALLY AUTHORIZED IN WRITING BY LUMEX INC., THE HOLDER OF THIS DOCUMENT SHALL KEEP ALL INFORMATION CONTAINED HEREIN CONFIDENTIAL AND SHALL PROTECT SAME IN WHOLE OR IN PART FROM DISCLOSURE AND DISSEMINATION TO ALL THIRD PARTIES.

Easy TFT COMMAND LIST

FONTs AND PAGE COMMANDs			
CODE	**FUNCTION**	**INSTRUCTION OF USING UART**	**API**
0x10	Write an ASCII Character or String without designated background page	1. at10=(Font size, X coordinate, Y coordinate, ASCII String) 2. 200ms delay Font zise: 0: 8x8 fonts 1: 8x16 fonts 2: 16x32 fonts 3: 32x64 fonts 4: 48x70 fonts 	printf("at10=(3,%d,%d,%3d)", X,Y,Speed); or printf("at10=(3,%d,%d,%6.3f)", X,Y,Exchange-Rate); or printf("at10=(4,20,30,%3d V)", Voltage); or printf("at10=(%d,%d,%s)", X,Y,String); Delay_ms(200) ;
0x20	Write an ASCII Character or String with designated background page	1. at20=(Page number, Font size, X coordinate, Y coordinate, ASCII String) 2. 200ms delay Font zise: 0: 8x8 fonts 1: 8x16 fonts 2: 16x32 fonts 3: 32x64 fonts 4: 48x70 fonts 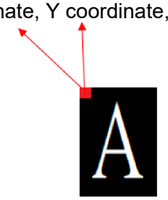	printf("at20=(%d,3,%d,%d,%3d)", Speed,X,Y,Speed); or printf("at20=(%d,3,%d,%d,%6.3f)", Page,X,Y,Exchange-Rate); or printf("at20=(%d,4,20,30,%3d V)", Page,Voltage); or printf("at20=(%d,%d,%d,%s)", Page,X,Y,String); Delay_ms(200) ;
0xfc	Change Background display to designated page	1. atfc=(page number 0~100) 2. 200ms delay	printf("atfc=(%d)",Page number); Delay_ms(200) ;
0xd2	Clear front page display	1. atd2=() 2. 200ms delay	printf("atd2=()"); Delay_ms(200) ;
0xc0	Setup the color of fonts for quardrant 1 to 8	1. atc0=(Hight byte of color code 0~255, Low byte of color code 0~255) 2. 200ms delay Remark: 16 bits Color code: 0x0000 ~ 0xFFFF Hight byte : 0~255 Low bytes : 0~255 	printf("atc0=(%d,%d)",High byte,Low byte); Delay_ms(200) ;
0xc1	Setup the color of fonts for quardrant 1 to 4	1. atc1=(Hight byte of color code 0~255, Low byte of color code 0~255) 2. 200ms delay Remark: 16 bits Color code: 0x0000 ~ 0xFFFF Hight byte : 0~255 Low bytes : 0~255 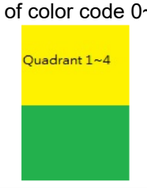	printf("atc1=(%d,%d)",High byte,Low byte); Delay_ms(200) ;

*UNLESS OTHERWISE SPECIFIED TOLERANCES PER DECIMAL PRECISION ARE: X=±1 (±0.039), X.X=±0.5 (±0.020), X.XX=±0.25 (±0.010), X.XXX=±0.127 (±0.005). LEAD SIZE=±0.05 (±0.002), LEAD LENGTH=±0.75 (±0.030). MIN= +DECIMAL PRECISION -0.00 MAX.= +0.00 -DECIMAL PRECISION

CONFIDENTIAL INFORMATION
THE INFORMATION CONTAINED IN THIS DOCUMENT IS THE PROPERTY OF LUMEX INC. EXCEPT AS SPECIFICALLY AUTHORIZED IN WRITING BY LUMEX INC., THE HOLDER OF THIS DOCUMENT SHALL KEEP ALL INFORMATION CONTAINED HEREIN CONFIDENTIAL AND SHALL PROTECT SAME IN WHOLE OR IN PART FROM DISCLOSURE AND DISSEMINATION TO ALL THIRD PARTIES.

Easy TFT COMMAND LIST

FONTs AND PAGE COMMANDs			
CODE	**FUNCTION**	**INSTRUCTION OF USING UART**	**API**
0xc2	Setup the color of fonts for quardrant 5 to 8	1. atc2=(Hight byte of color code 0~255, Low byte of color code 0~255) 2. 200ms delay Remark: 16 bits Color code: 0x0000 ~ 0xFFFF Hight byte : 0~255 Low bytes : 0~255 	printf("atc2=(%d,%d)",High byte,Low byte); Delay_ms(200) ;
0xc3	Setup the color of fonts for designated quardrant	1. atc3=(Hight byte of color code 0~255, Low byte of color code 0~255) 2. 200ms delay Remark: 1. quardrant#:1~8 2. 16 bits Color code: 0x0000 ~ 0xFFFF Hight byte : 0~255 Low bytes : 0~255 	printf("atc3=(1.240,0)";or (quadrant 1 Red color) printf("atc3=(%d,%d,%d)"quadrant,High byte,Low byte); Delay_ms(200) ;

SYSTEM CONTROL COMMANDs			
CODE	**FUNCTION**	**INSTRUCTION OF USING UART**	**API**
0xf2	Setup backlight brightness	1. atf2=(backlight brightness 1~100) 2. 200ms delay	printf("atf2=(%d)",brightness); 200ms delay;
0xf3	Erase correspond falsh memory page	1. atf3=(page number 0~199) 2. 200ms delay	printf("atf3=(%d)",Page number); 200ms delay;
0xf7	Turn front page display 90 degree left	1. atf7=(0 or 1) 2. 200ms delay	printf("atf7=(1)",turn_flag; 200ms delay;

*UNLESS OTHERWISE SPECIFIED TOLERANCES PER DECIMAL PRECISION ARE: X=±1 (±0.039), X.X=±0.5 (±0.020), X.XX=±0.25 (±0.010), X.XXX=±0.127 (±0.005). LEAD SIZE=±0.05 (±0.002), LEAD LENGTH=±0.75 (±0.030). MIN= +DECIMAL PRECISION -0.00 MAX.= +0.00 -DECIMAL PRECISION

CONFIDENTIAL INFORMATION
THE INFORMATION CONTAINED IN THIS DOCUMENT IS THE PROPERTY OF LUMEX INC. EXCEPT AS SPECIFICALLY AUTHORIZED IN WRITING BY LUMEX INC., THE HOLDER OF THIS DOCUMENT SHALL KEEP ALL INFORMATION CONTAINED HEREIN CONFIDENTIAL AND SHALL PROTECT SAME IN WHOLE OR IN PART FROM DISCLOSURE AND DISSEMINATION TO ALL THIRD PARTIES.

Easy TFT COMMAND LIST

GRAPHIC COMMANDs			
CODE	**FUNCTION**	**INSTRUCTION OF USING UART**	**API**
0x90	Draw a line	1. at90=(X0 coordinate, Y0 coordinate, X1 coordinate, Y1 coordinate) 2. 200ms delay	printf("at90=(%d,%d,%d,%d)",X0 coordinate,Y0 coordinate,X1 coordinate,Y1 coordinate); 200ms delay;
0x91	Draw a Rectangle	1. at91=(X0 coordinate, Y0 coordinate, X1 coordinate, Y1 coordinate) 2. 200ms delay	printf("at91=(%d,%d,%d,%d)",X0 coordinate,Y0 coordinate,X1 coordinate,Y1 coordinate); 200ms delay;
0x92	Draw a solid Rectangle	1. at92=(X0 coordinate, Y0 coordinate, X1 coordinate, Y1 coordinate) 2. 200ms delay	printf("at92=(%d,%d,%d,%d)",X0 coordinate,Y0 coordinate,X1 coordinate,Y1 coordinate); 200ms delay;
0x94	Draw a Circle	1. at94=(X coordinate, Y coordinate,Radius) 2. 200ms delay	printf("at94=(%d,%d,%d)",X coordinate,Y coordinate,Radius); 200ms delay;
0x95	Draw a solid Circle	1. at95=(X coordinate, Y coordinate,Radius) 2. 200ms delay	printf("at95=(%d,%d,%d)",X coordinate,Y coordinate,Radius); 200ms delay;
0x96	Draw a tip upward Triangle	1. at96=(X coordinate, Y coordinate, Height) 2. 200ms delay	printf("at96=(%d,%d,%d)",X coordinate,Y coordinate,Height); 200ms delay;
0x97	Draw a tip upward solid Triangle	1. at97=(X coordinate, Y coordinate, Height) 2. 200ms delay	printf("at97=(%d,%d,%d)",X coordinate,Y coordinate,Height); 200ms delay;
0x98	Draw a tip downward Triangle	1. at98=(X coordinate, Y coordinate, Height) 2. 200ms delay	printf("at98=(%d,%d,%d)",X coordinate,Y coordinate,Height); 200ms delay;
0x99	Draw a tip downward solid Triangle	1. at99=(X coordinate, Y coordinate, Height) 2. 200ms delay	printf("at99=(%d,%d,%d)",X coordinate,Y coordinate,Height); 200ms delay;
0x9a	Draw a tip leftward Triangle	1. at9a=(X coordinate, Y coordinate, Height) 2. 200ms delay	printf("at9a=(%d,%d,%d)",X coordinate,Y coordinate,Height); 200ms delay;
0x9b	Draw a tip leftward solid Triangle	1. at9b=(X coordinate, Y coordinate, Height) 2. 200ms delay	printf("at9b=(%d,%d,%d)",X coordinate,Y coordinate,Height); 200ms delay;
0x9c	Draw a tip rightward Triangle	1. at9c=(X coordinate, Y coordinate, Height) 2. 200ms delay	printf("at9c=(%d,%d,%d)",X coordinate,Y coordinate,Height); 200ms delay;
0x9d	Draw a tip rightward solid Triangle	1. at9d=(X coordinate, Y coordinate, Height) 2. 200ms delay	printf("at9d=(%d,%d,%d)",X coordinate,Y coordinate,Height); 200ms delay;
0x9e	Draw a pixel	1. at9e=(X coordinate, Y coordinate) 2. 200ms delay	printf("at9e=(%d,%d)",X coordinate,Y coordinate); 200ms delay;

*UNLESS OTHERWISE SPECIFIED TOLERANCES PER DECIMAL PRECISION ARE: X=±1 (±0.039), X.X=±0.5 (±0.020), X.XX=±0.25 (±0.010), X.XXX=±0.127 (±0.005). LEAD SIZE=±0.05 (±0.002), LEAD LENGTH=±0.75 (±0.030). MIN= $^{+\text{DECIMAL PRECISION}}_{-0.00}$ MAX.= $^{+0.00}_{-\text{DECIMAL PRECISION}}$

CONFIDENTIAL INFORMATION
THE INFORMATION CONTAINED IN THIS DOCUMENT IS THE PROPERTY OF LUMEX INC. EXCEPT AS SPECIFICALLY AUTHORIZED IN WRITING BY LUMEX INC., THE HOLDER OF THIS DOCUMENT SHALL KEEP ALL INFORMATION CONTAINED HEREIN CONFIDENTIAL AND SHALL PROTECT SAME IN WHOLE OR IN PART FROM DISCLOSURE AND DISSEMINATION TO ALL THIRD PARTIES.