UNCONTROLLED DOCUMENT

SC:2 | PART NUMBER | REV.

LDC–NA1812G

PRELIMINARY IN P/N DIR

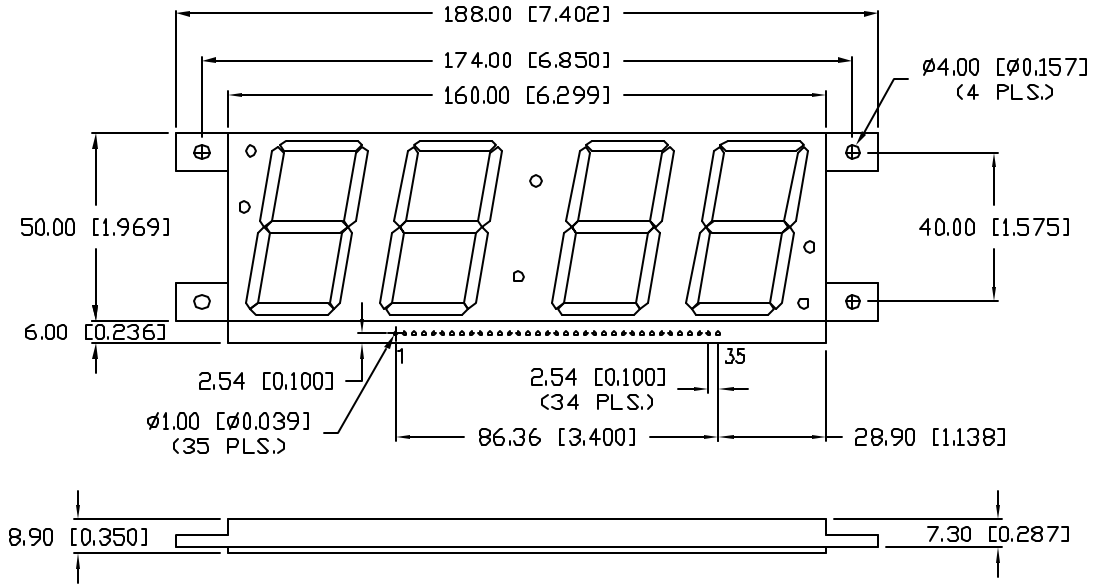

ELECTRO-OPTICAL CHARACTERISTICS T_A=25°C I_f=10mA

PARAMETER	MIN	TYP	MAX	UNITS	TEST COND
PEAK WAVELENGTH		565 (GREEN)		nm	
FORWARD VOLTAGE *		4.4/2.2	5.2/2.6	V_f	
REVERSE VOLTAGE	5.0			V_r	I_r=100µA
AXIAL INTENSITY		4400		µcd	I_f=10mA
EMITTED COLOR:	GREEN				
FACE COLOR:	GREEN				
SEGMENT COLOR:	GREEN DIFFUSED				

* SECOND VALUE FOR SINGLE CHIP IN DECIMAL POINT. (DP1,DP2,DP6)

LIMITS OF SAFE OPERATION AT 25°C PER DIE

PARAMETER	MAX	UNITS
PEAK FORWARD CURRENT*	80	mA
STEADY CURRENT	25	mA
POWER DISSIPATION	105	mW
DERATE FROM 25°C	– 1.2	mW/°C
OPERATING, STORAGE TEMP.	– 20 TO + 80	°C
SOLDERING TEMP.	+ 260	°C
2.0mm FROM BODY		3 SEC. MAX

* t<10µS

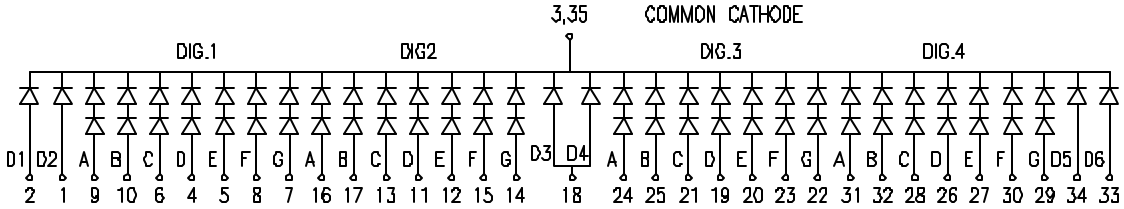

UNCONTROLLED DOCUMENT

*UNLESS OTHERWISE SPECIFIED TOLERANCES PER DECIMAL PRECISION ARE: X=±1 (±0.038), X.X=±0.5 (±0.020), X.XX=±0.25 (±0.010), X.XXX=±0.127 (±0.005). LEAD SIZE=±0.05 (±0.002), LEAD LENGTH=±0.75 (±0.030). MIN= +DECIMAL PRECISION −0.00 MAX.= +0.00 −DECIMAL PRECISION

REV. | PART NUMBER LDC–NA1812G

1.8" QUAD DIGIT, SEVEN SEGMENT, CLOCK DISPLAY, 565nm GREEN CHIPS, GREEN FACE, AIR GAP, GREEN DIFFUSED SEGMENTS, COMMON CATHODE.

CONFIDENTIAL INFORMATION
THE INFORMATION CONTAINED IN THIS DOCUMENT IS THE PROPERTY OF LUMEX INC. EXCEPT AS SPECIFICALLY AUTHORIZED IN WRITING BY LUMEX INC., THE HOLDER OF THIS DOCUMENT SHALL KEEP ALL INFORMATION CONTAINED HEREIN CONFIDENTIAL AND SHALL PROTECT SAME IN WHOLE OR IN PART FROM DISCLOSURE AND DISSEMINATION TO ALL THIRD PARTIES.

RELIABILITY NOTE
OUR MANY YEARS OF EXPERIENCE DATA ACCUMULATION INDICATE THAT SOLDER HEAT IS A MAJOR CAUSE OF EARLY AND FUTURE FAILURE. PLEASE PAY ATTENTION TO YOUR SOLDERING PROCESS.

LUMEX
290 E. HELEN ROAD
PALATINE, IL 60067–6976
PHONE: +1.847.359.2790
US WEB: www.lumex.com
TW WEB: www.lumex.com.tw

DRAWN BY:	CHECKED BY:	APPROVED BY:	DATE: 11.12.01
BS/CT			PAGE: 1 OF 1
			SCALE: N/A