PART NUMBER	LDD-A406NI	REV	C

REV	ECN NUMBER AND REVISION COMMENTS	DATA
A	E.C.N #10BRDR. & REDRAWN	02.12.99
B	E.C.N #11148	04.25.07
C	ECN-Lumex202200074	11.28.22

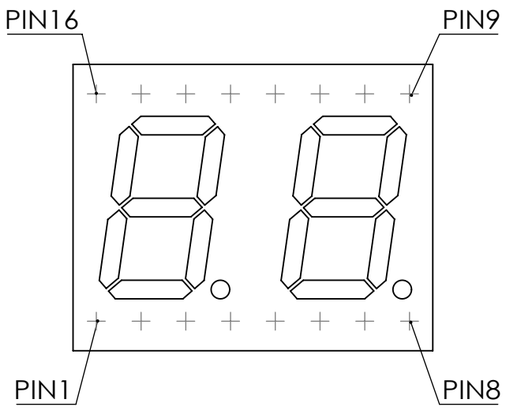

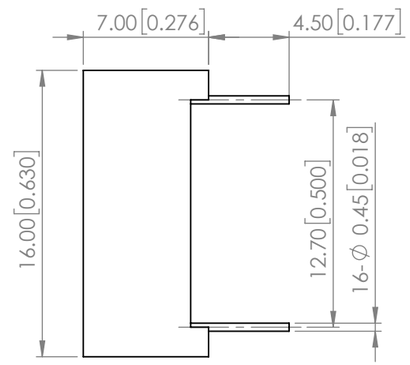

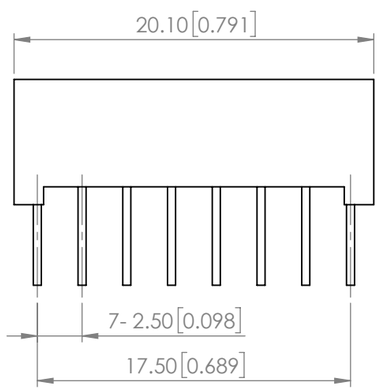

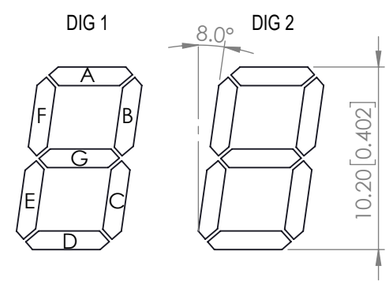

ELECTRO-OPTICAL CHARACTERISTIC TA=25℃ PER SEGMENT

PARAMETER	MIN	TYP	MAX	UNITS	TEST COND
PEAK WAVELENGTH	-	660	-	nm	If=20mA
FORWARD VOLTAGE	-	2.0	2.5	Vf	If=20mA
REVERSE CURRENT	-	-	100	uA	VR=5V
LUMINOUS INTENSITY	-	6500	-	ucd	If=10mA
EMITTED COLOR	RED				
FACE COLOR	GRAY				
SEGMENT COLOR	MILKY WHITE DIFFUSED				

ABSOLUTE MAXIMUM RATINGS TA=25℃ PER SEGMENT

PARAMETER	MAX	UNITS
PEAK FORWARD CURRENT*	100	mA
FORWARD CURRENT	25	mA
REVERSE VOLTAGE	5	V
POWER DISSIPATION	65	mW
STORAGE TEMPERATURE	-35 TO +85	℃
OPERATING TEMPERATURE	-35 TO +85	℃

*1/10 duty, f=10kHz

POLARITY

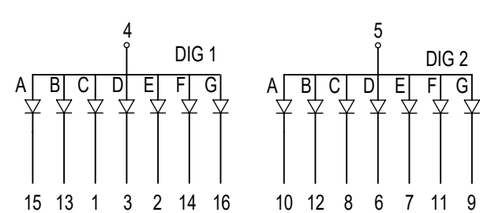

*UNLESS OTHERWISE SPECIFIED TOLERANCES PER DECIMAL PRECISION ARE: X=±1 (±0.039), X.X=±0.5 (±0.020), X.XX=±0.25 (±0.010), X.XXX=±0.127 (±0.005). LEAD SIZE=±0.05 (±0.002), LEAD LENGTH=±0.75 (±0.030). MIN= +DECIMAL PRECISION -0.00 MAX.= +0.00 -DECIMAL PRECISION

LUMEX® Creating LED and LCD Solutions Together™

425 N. GARY AVE.
CAROL STREAM, IL 60188
PHONE : 800-278-5666
FAX : 630-315-2150
WEB : WWW.LUMEX.COM

0.4" SEVEN SEGMENT, DUAL DIGIT DISPLAY, 660nm RED, GRAY FACE WITH MILKY WHITE SEGMENTS, COMMON ANODE, NO CHIP IN DECIMALS

****THE SPECIFICATIONS MAY CHANGE AT ANY TIME WITHOUT NOTICE.****

CONFIDENTIAL INFORMATION

THE INFORMATION CONTAINED IN THIS DOCUMENT IS THE PROPERTY OF LUMEX INC. EXCEPT AS SPECIFICALLY AUTHORIZED IN WRITING BY LUMEX INC., THE HOLDER OF THIS DOCUMENT SHALL KEEP ALL INFORMATION CONTAINED HEREIN CONFIDENTIAL AND SHALL PROTECT SAME IN WHOLE OR IN PART FROM DISCLOSURE AND DISSEMINATION TO ALL THIRD PARTIES.

DATE : 2022.11.28	DRAWN BY : E.C.
PAGE : 1 OF 1	CHKD BY : E.C.
SCALE : NTF	APRVD BY : G.Y.
UNIT : mm [INCH]	Pb