DATE	REVISIONS	REV
5-29-91	REDUCE PINS FROM 9 TO 7, △LEAD SPACING & M'PLEX CKT/	A
10-8-91	"2.54 +/-.254" DIM WAS "2.54 MIN"/	B
5-4-92	REDRAWN/ ADDED "MIN BEND RAD" & NOTE/ CHG'D REF LINE FOR DIM "2.54" TO "2.03 +/-.25"/	C

DRAWING NUMBER LDD-E304ND-23565 REV C

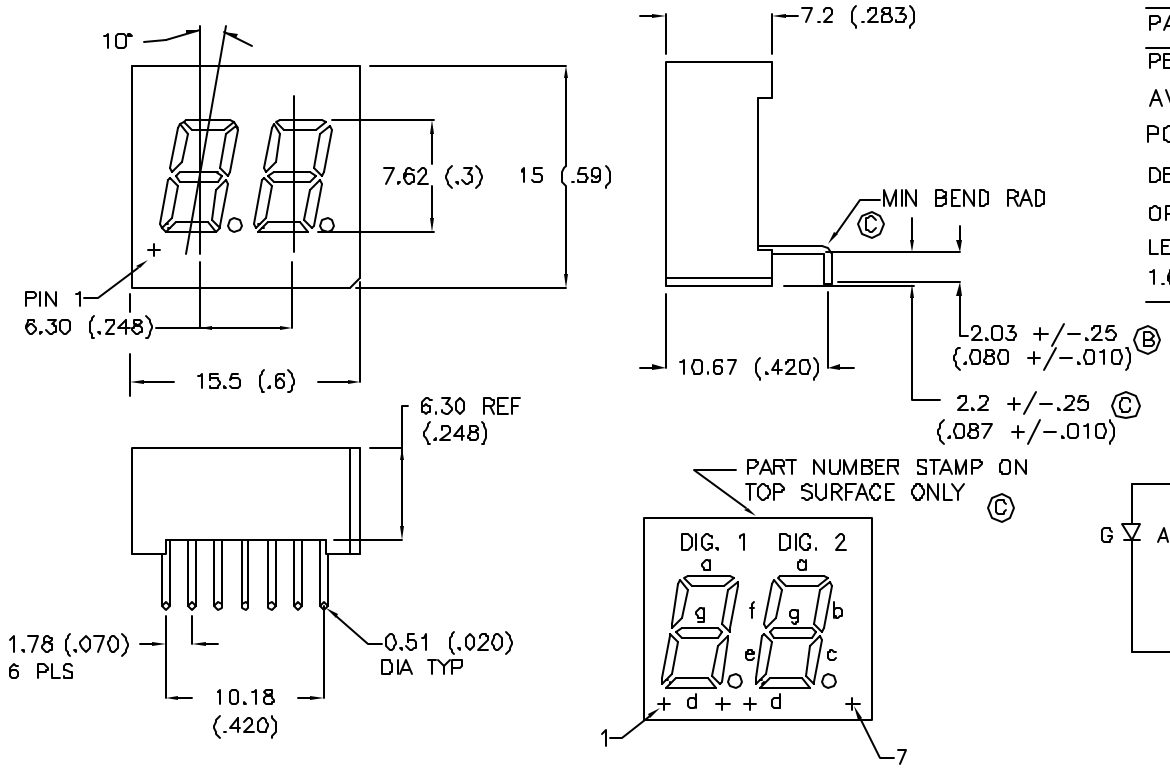

LIMITS OF SAFE OPERATION AT 25 °C

PARAMETER	MAX	UNITS
PEAK FORWARD CURRENT	50	mA
AVG FORWARD CURRENT	20	mA
POWER DISSIPATION	728	mW
DERATE FROM 25 °C	-1.6	mW/ °C
OPERATING/STORAGE TEMP.	-25 TO +80	°C
LEAD SOLDERING TEMP. 1.6mm FROM BODY	+230	°C 5 SEC. MAX

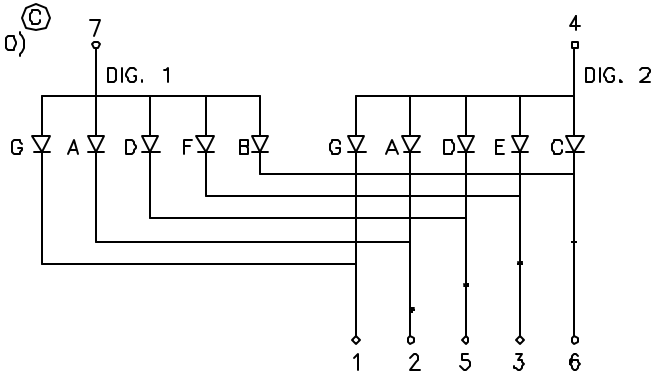

ELECTRO-OPTICAL CHARACTERISTICS T_A=25 °C I_f=20mA

PARAMETER	MIN	TYP	MAX	UNITS	TEST COND
PEAK WAVELENGTH		635 (RED)		nm	
FORWARD VOLTAGE		2.1	2.6	V_f	
REVERSE VOLTAGE	5.0			V_r	I_r=100uA
AXIAL INTENSITY		1200		ucd	I_f=10mA
VIEWING ANGLE		80		2x theta	

EMITTED COLOR: RED/ORANGE
EPOXY SEGMENT: MILKY WHITE DIFFUSED
FONT COLOR: BLACK

LDDE30AB

LUMEX OPTO COMPONENTS INC.
292 E. HELLEN ROAD
PALATINE, ILLINOIS 60067
(708) 359-2790

DATE: 5-29-91	APPROVED BY:	DRAWN BY:
SCALE: N/A		

CUSTOM DUAL DIGIT DISPLAY, 0.3" HEIGHT

DRAWING NUMBER LDD-E304ND-23565 REV C