PART NUMBER	LDD–HTE303NI	REV.	

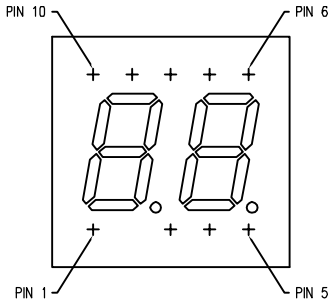

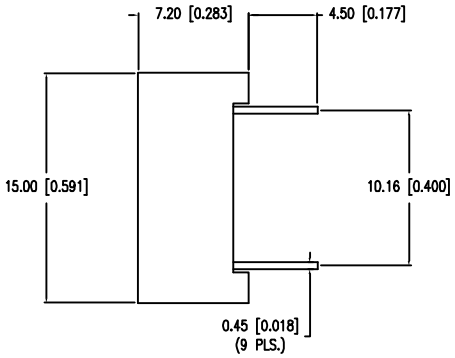

ELECTRO–OPTICAL CHARACTERISTICS $T_A = 25°C$ $I_f = 10mA$

PARAMETER	MIN	TYP	MAX	UNITS	TEST COND
PEAK WAVELENGTH		585		nm	
FORWARD VOLTAGE		2.1	2.5	V_f	
REVERSE VOLTAGE	5.0			V_r	$I_r = 100\mu A$
AXIAL INTENSITY		3900		µcd	$I_f = 10mA$
EMITTED COLOR:	YELLOW				
FACE COLOR:	GRAY				
SEGMENT COLOR:	MILKY WHITE DIFFUSED				

LIMITS OF SAFE OPERATION AT 25°C PER CHIP

PARAMETER	MAX	UNITS
PEAK FORWARD CURRENT*	150	mA
STEADY CURRENT	25	mA
POWER DISSIPATION	105	mW
DERATE FROM 25°C	– 1.6	mW/°C
OPERATING, STORAGE TEMP.	–40 TO +105	°C
SOLDERING TEMP.	+260	°C
2.0mm FROM BODY	3	SEC. MAX

* t<10µS

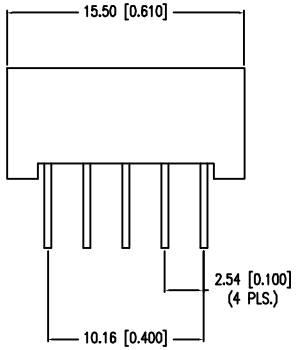

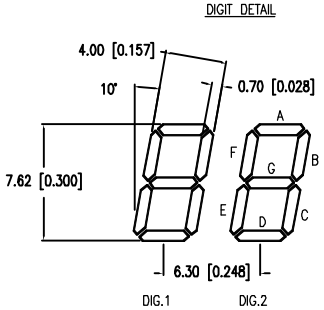

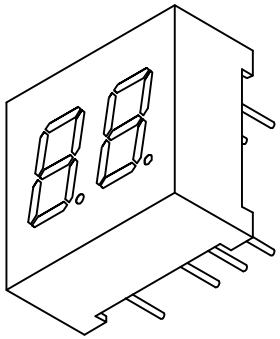

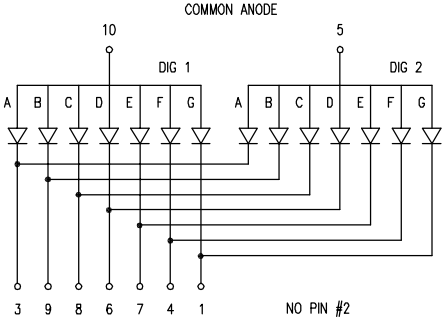

*UNLESS OTHERWISE SPECIFIED TOLERANCES PER DECIMAL PRECISION ARE: X=±1 (±0.039), X.X=±0.5 (±0.020), X.XX=±0.25 (±0.010), X.XXX=±0.127 (±0.005). LEAD SIZE=±0.05 (±0.002), LEAD LENGTH=±0.75 (±0.030). MIN= +DECIMAL PRECISION −0.00 MAX.= +0.00 −DECIMAL PRECISION

UNCONTROLLED DOCUMENT

LUMEX®
Creating LED and LCD Solutions Together™
290 E. HELEN ROAD
PALATINE, IL 60067–6976
PHONE: +1.847.359.2790
FAX: +1.847.359.6538
WEB: WWW.LUMEX.COM

0.30" SEVEN SEGMENT, DUAL DIGIT, LED DISPLAY, 585nm YELLOW CHIPS, MULTIPLEXED, COMMON ANODE.

THE SPECIFICATIONS MAY CHANGE AT ANY TIME WITHOUT NOTICE DUE TO NEW MATERIALS OR PRODUCT IMPROVEMENT.

CONFIDENTIAL INFORMATION
THE INFORMATION CONTAINED IN THIS DOCUMENT IS THE PROPERTY OF LUMEX INC. EXCEPT AS SPECIFICALLY AUTHORIZED IN WRITING BY LUMEX INC., THE HOLDER OF THIS DOCUMENT SHALL KEEP ALL INFORMATION CONTAINED HEREIN CONFIDENTIAL AND SHALL PROTECT SAME IN WHOLE OR IN PART FROM DISCLOSURE AND DISSEMINATION TO ALL THIRD PARTIES.

DATE:	02.01.10	DRAWN BY:	JN
PAGE:	1 OF 1	CHKD BY:	
SCALE:	N/A	APRVD BY:	SS
UNIT:	mm [INCH]		