UNCONTROLLED DOCUMENT

PART NUMBER

# LDD-SMC5607RIUSBTR

REV.

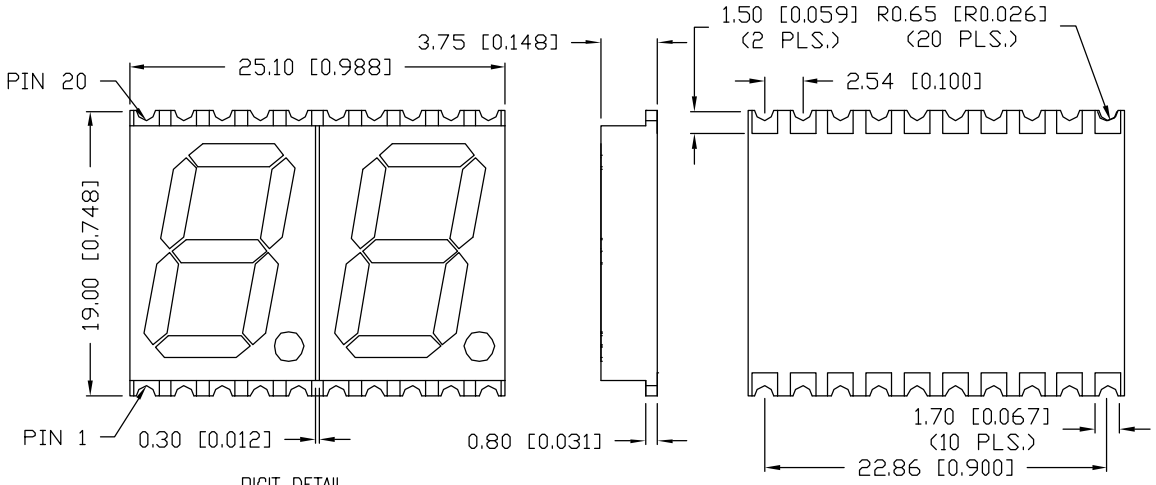


DIGIT DETAIL

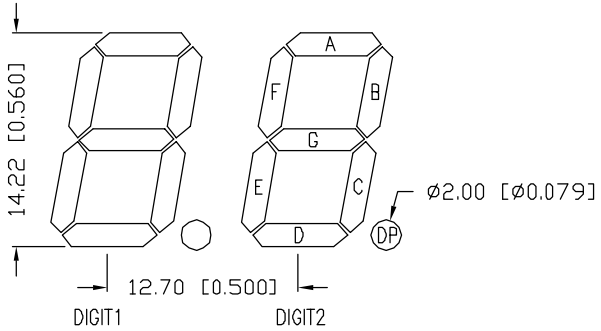


LEAD FREE REFLOW PROFILE

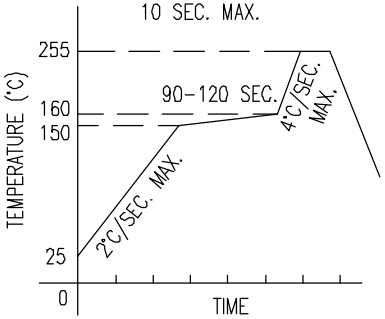


ELECTRO-OPTICAL CHARACTERISTICS $T_A$=25°C $I_f$=10mA

| PARAMETER | MIN | TYP | MAX | UNITS | TEST COND |
|---|---|---|---|---|---|
| PEAK WAVELENGTH | | 470 | | nm | |
| FORWARD VOLTAGE | | 3.65 | 4.2 | $V_f$ | |
| REVERSE VOLTAGE | 5.0 | | | $V_r$ | $I_r$=100µA |
| AXIAL INTENSITY | | 15800 | | µcd | $I_f$=10mA |
| EMITTED COLOR: | BLUE | | | | |
| FACE COLOR: | GRAY | | | | |
| SEGMENT COLOR: | MILKY WHITE DIFFUSED | | | | |

LIMITS OF SAFE OPERATION AT 25°C PER CHIP

| PARAMETER | MAX | UNITS |
|---|---|---|
| PEAK FORWARD CURRENT* | 160 | mA |
| STEADY CURRENT | 30 | mA |
| POWER DISSIPATION | 126 | mW |
| DERATE FROM 25°C | -1.2 | mW/°C |
| OPERATING, STORAGE TEMP. | -40 TO +85 | °C |

* t<10µS

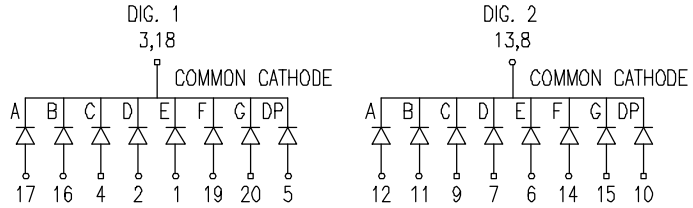


TAPE SPEC

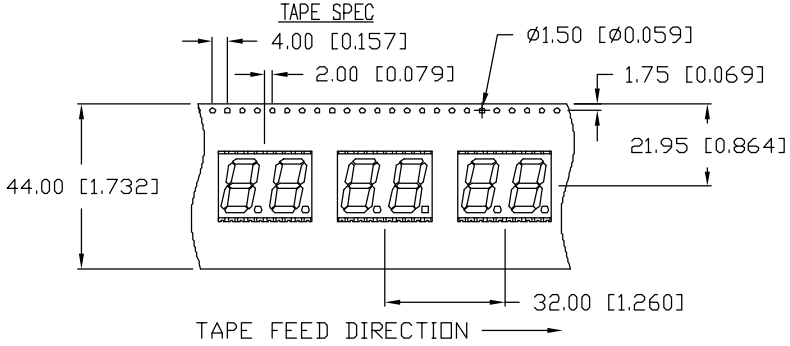


TOTAL TIME ABOVE 220°C IS 60 SECONDS MAX.

RECOMMENDED SOLDER PAD LAYOUT

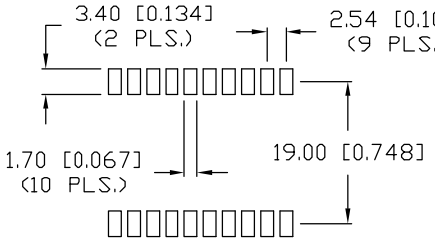


NOTES:

1. 200 PIECES PER REEL.

Pb

UNCONTROLLED DOCUMENT

*UNLESS OTHERWISE SPECIFIED TOLERANCES PER DECIMAL PRECISION ARE: X=±1 (±0.039), X.X=±0.5 (±0.020), X.XX=±0.25 (±0.010), X.XXX=±0.127 (±0.005). LEAD SIZE=±0.05 (±0.002), LEAD LENGTH=±0.75 (±0.030). MIN= +DECIMAL PRECISION -0.00 MAX.= +0.00 -DECIMAL PRECISION

REV.

PART NUMBER

LDD-SMC5607RIUSBTR

0.56" SURFACE MOUNT, DUAL DIGIT 7 SEGMENT DISPLAY, COMMON CATHODE, 470nm BLUE LEDS.


CONFIDENTIAL INFORMATION

THE INFORMATION CONTAINED IN THIS DOCUMENT IS THE PROPERTY OF LUMEX INC. EXCEPT AS SPECIFICALLY AUTHORIZED IN WRITING BY LUMEX INC., THE HOLDER OF THIS DOCUMENT SHALL KEEP ALL INFORMATION CONTAINED HEREIN CONFIDENTIAL AND SHALL PROTECT SAME IN WHOLE OR IN PART FROM DISCLOSURE AND DISSEMINATION TO ALL THIRD PARTIES.


RELIABILITY NOTE

OUR MANY YEARS OF EXPERIENCE DATA ACCUMULATION INDICATE THAT SOLDER HEAT IS A MAJOR CAUSE OF EARLY AND FUTURE FAILURE. PLEASE PAY ATTENTION TO YOUR SOLDERING PROCESS.


LUMEX An ITW Company

290 E. HELEN ROAD
PALATINE, IL 60067-6976
PHONE: +1.847.359.2790
US WEB: www.lumex.com
TW WEB: www.lumex.com.tw


| DRAWN BY: | CHECKED BY: | APPROVED BY: | DATE: 02.17.09 |
|---|---|---|---|
| JN | | | PAGE: 1 OF 1 |
| | | | SCALE: N/A |