UNCONTROLLED DOCUMENT

PART NUMBER

# LDS-A354RD-SI

REV.

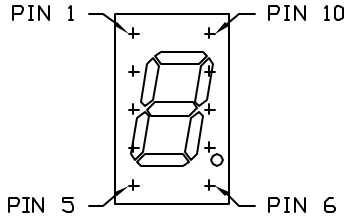


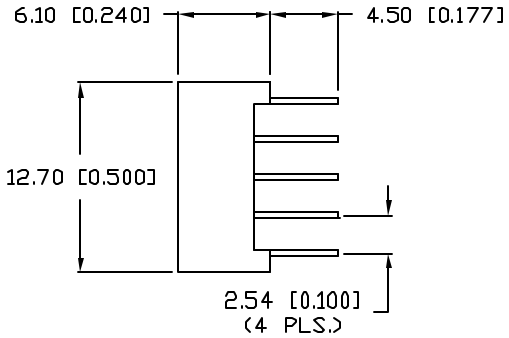


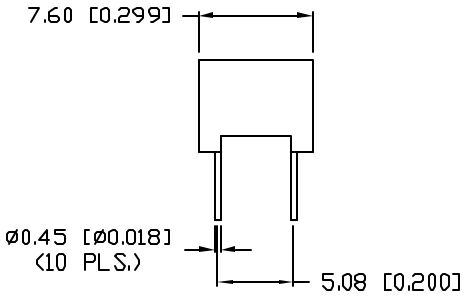


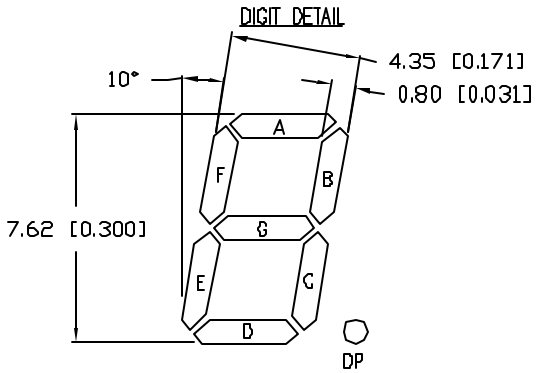


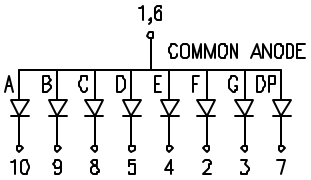


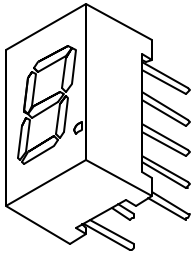

ELECTRO-OPTICAL CHARACTERISTICS $T_A$=25°C $I_f$=10mA

| PARAMETER | MIN | TYP | MAX | UNITS | TEST COND |
|---|---|---|---|---|---|
| PEAK WAVELENGTH | | 636 | | nm | |
| FORWARD VOLTAGE | | 2.0 | 2.6 | $V_f$ | |
| REVERSE VOLTAGE | 5.0 | | | $V_r$ | $I_r$=100µA |
| AXIAL INTENSITY | | 13000 | | µcd | $I_f$=10mA |
| EMITTED COLOR: | RED | | | | |
| FACE COLOR: | BLACK | | | | |
| SEGMENT COLOR: | MILKY WHITE DIFFUSED | | | | |

LIMITS OF SAFE OPERATION AT 25°C PER DIE

| PARAMETER | MAX | UNITS |
|---|---|---|
| PEAK FORWARD CURRENT* | 150 | mA |
| STEADY CURRENT | 30 | mA |
| POWER DISSIPATION | 105 | mW |
| DERATE FROM 25°C | −1.6 | mW/°C |
| OPERATING, STORAGE TEMP. | −40 TO +85 | °C |
| SOLDERING TEMP. | +260 | °C |
| 2.0mm FROM BODY | | 3 SEC. MAX |

* t<10µS

UNCONTROLLED DOCUMENT

*UNLESS OTHERWISE SPECIFIED TOLERANCES PER DECIMAL PRECISION ARE: X=±1 (±0.039), X.X=±0.5 (±0.020), X.XX=±0.25 (±0.010), X.XXX=±0.127 (±0.005). LEAD SIZE=±0.05 (±0.002), LEAD LENGTH=±0.75 (±0.030). MIN= +DECIMAL PRECISION −0.00 MAX.= +0.00 −DECIMAL PRECISION

REV.

PART NUMBER

LDS-A354RD-SI

0.30" SEVEN SEGMENT, LED DISPLAY, COMMON ANODE, 636nm RED CHIPS, BLACK FACE WITH WHITE SEGMENTS.

CONFIDENTIAL INFORMATION
THE INFORMATION CONTAINED IN THIS DOCUMENT IS THE PROPERTY OF LUMEX INC. EXCEPT AS SPECIFICALLY AUTHORIZED IN WRITING BY LUMEX INC., THE HOLDER OF THIS DOCUMENT SHALL KEEP ALL INFORMATION CONTAINED HEREIN CONFIDENTIAL AND SHALL PROTECT SAME IN WHOLE OR IN PART FROM DISCLOSURE AND DISSEMINATION TO ALL THIRD PARTIES.

RELIABILITY NOTE
OUR MANY YEARS OF EXPERIENCE DATA ACCUMULATION INDICATE THAT SOLDER HEAT IS A MAJOR CAUSE OF EARLY AND FUTURE FAILURE. PLEASE PAY ATTENTION TO YOUR SOLDERING PROCESS.

LUMEX INC.
290 E. HELEN ROAD
PALATINE, IL 60067-6976
PHONE: +1.847.359.2790
US WEB: www.lumex.com
TW WEB: www.lumex.com.tw

| DRAWN BY: | CHECKED BY: | APPROVED BY: | DATE: 8.18.03 |
|---|---|---|---|
| BC | | | PAGE: 1 OF 1 |
| | | | SCALE: N/A |