PART NUMBER	LDS-AA404RI-SI	REV	A

REV	E.C.N. NUMBER AND REVISION COMMENTS	DATE
A	ECN-Lumex202400004	01.26.24

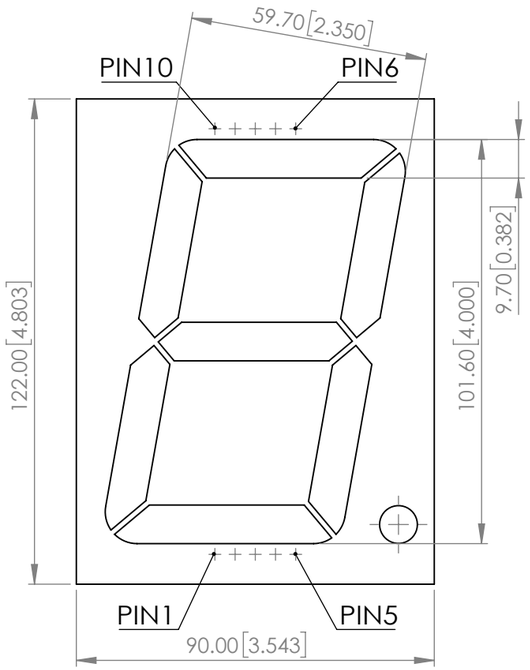

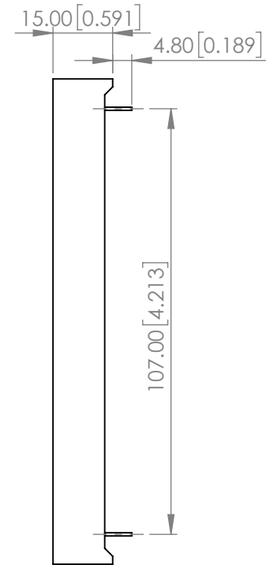

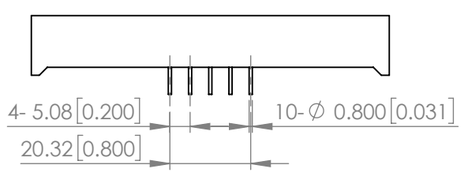

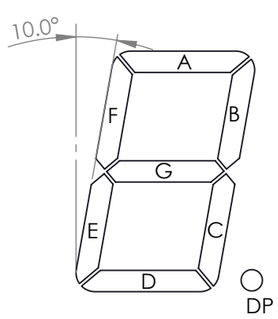

CIRCUIT DIAGRAM

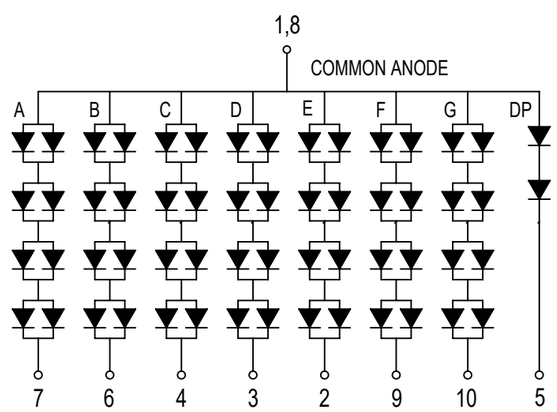

ELECTRO-OPTICAL CHARACTERISTIC TA=25℃ PER SEGMENT

PARAMETER		MIN	TYP	MAX	UNITS	TEST COND
PEAK WAVELENGTH	PER DICE	-	645	-	nm	If=20mA
FORWARD VOLTAGE	PER SEGMENT	-	8.0	10.4	Vf	If=40mA
	DP		4.0	5.2		If=20mA
REVERSE CURRENT	PER SEGMENT	-	-	100	uA	VR=20V
	DP	-	-	100		VR=10V
LUMINOUS INTENSITY	PER DICE	-	34	-	mcd	If=10mA
EMITTED COLOR		RED				
FONT COLOR		GRAY				
SEGMENT COLOR		MILKY WHITE DIFFUSED				

ABSOLUTE MAXIMUM RATINGS TA=25℃ PER SEGMENT

PARAMETER	MAX	UNITS
PEAK FORWARD CURRENT(PER DICE)*	100	mA
FORWARD CURRENT(PER SEGMENT/DP)	40/20	mA
POWER DISSIPATION(PER SEGMENT/DP)	416/104	mW
REVERSE VOLTAGE(PER DICE)	5	V
STORAGE TEMPERATURE	-35 TO +85	℃
OPERATING TEMPERATURE	-35 TO +85	℃
SOLDERING TEMPERATURE**	3 SEC MAX. @ 260	℃

*** 1/10 DUTY,10KHz**

**** AT 2mm DISTANCE FROM THE CASE OF REFLECTOR EDGE.**

*UNLESS OTHERWISE SPECIFIED TOLERANCES PER DECIMAL PRECISION ARE: X=±1 (±0.039), X.X=±0.5 (±0.020), X.XX=±0.25 (±0.010), X.XXX=±0.127 (±0.005). LEAD SIZE=±0.05 (±0.002), LEAD LENGTH=±0.75 (±0.030). MIN= +DECIMAL PRECISION -0.00 MAX.= +0.00 -DECIMAL PRECISION

TW LUMEX Creating LED · LCD & Switch Solutions

425 N. GARY AVE.
CAROL STREAM, IL 60188
PHONE : 800-278-5666
FAX : 630-315-2150
WEB : WWW.LUMEX.COM

4.0" SINGLE DIGIT, SEVEN SEGMENT LED DISPLAY, 645nm RED CHIPS, GRAY FACE WITH WHITE SEGMENTS, COMMON ANODE 10 PINs.

****THE SPECIFICATIONS MAY CHANGE AT ANY TIME WITHOUT NOTICE.****

CONFIDENTIAL INFORMATION
THE INFORMATION CONTAINED IN THIS DOCUMENT IS THE PROPERTY OF LUMEX INC. EXCEPT AS SPECIFICALLY AUTHORIZED IN WRITING BY LUMEX INC., THE HOLDER OF THIS DOCUMENT SHALL KEEP ALL INFORMATION CONTAINED HEREIN CONFIDENTIAL AND SHALL PROTECT SAME IN WHOLE OR IN PART FROM DISCLOSURE AND DISSEMINATION TO ALL THIRD PARTIES.

DATE : 2024.01.25	DRAWN BY : E.C.
PAGE : 1 OF 1	CHKD BY : T.S.
SCALE : NTF	APRVD BY : G.Y.
UNIT : mm [INCH]	Pb