UNCONTROLLED DOCUMENT

PART NUMBER	REV.
LDS-SMA3003RI-TR	A

REV.	E.C.N. NUMBER AND REVISION COMMENTS	DATE
A	E.C.N. #11446.	9.26.07

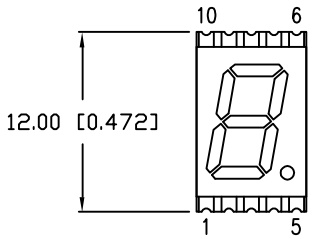

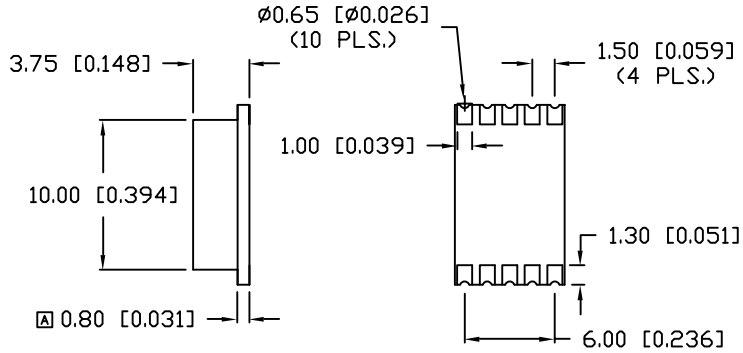

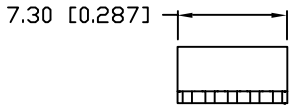

A LEAD FREE REFLOW PROFILE

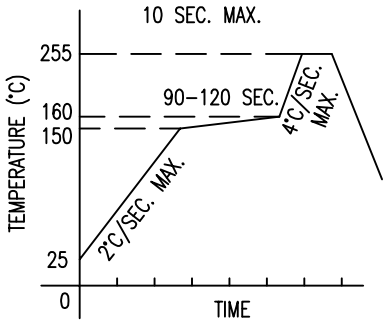

TOTAL TIME ABOVE 220°C IS 60 SECONDS MAX.

DIGIT DETAIL

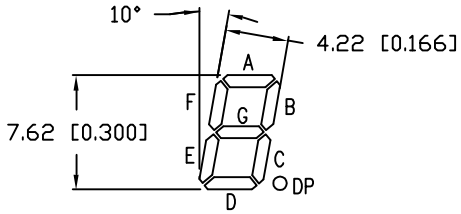

RECOMMENDED SOLDER PAD LAYOUT

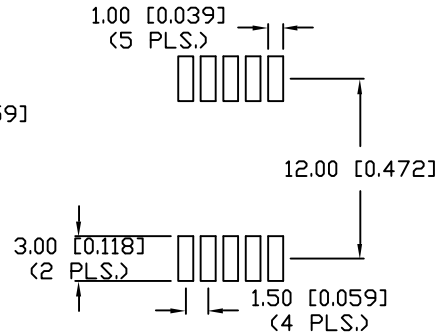

ELECTRO-OPTICAL CHARACTERISTICS T_A=25°C I_f=10mA

PARAMETER	MIN	TYP	MAX	UNITS	TEST COND
PEAK WAVELENGTH		585		nm	
FORWARD VOLTAGE		2.1	2.5	V_f	
REVERSE VOLTAGE	5.0			V_r	I_r=100µA
AXIAL INTENSITY		2500		ucd	I_f=10mA
EMITTED COLOR:	YELLOW				
FACE COLOR:	GRAY				
SEGMENT COLOR:	MILKY WHITE DIFFUSED				

LIMITS OF SAFE OPERATION AT 25°C PER CHIP

PARAMETER	MAX	UNITS
PEAK FORWARD CURRENT*	150	mA
STEADY CURRENT	30	mA
POWER DISSIPATION	170	mW
DERATE FROM 25°C	−1.2	mW/°C
OPERATING, STORAGE TEMP.	−40 TO +85	°C

* t<10µS

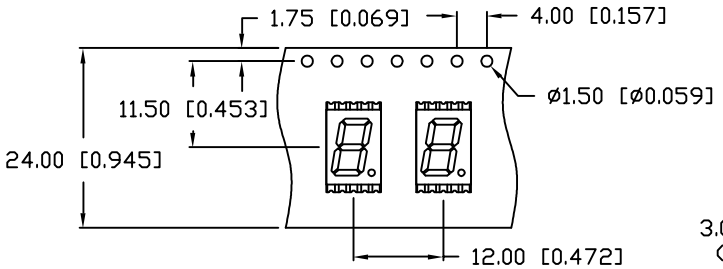

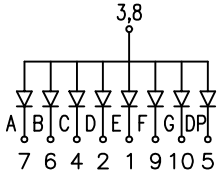

A

UNCONTROLLED DOCUMENT

*UNLESS OTHERWISE SPECIFIED TOLERANCES PER DECIMAL PRECISION ARE: X=±1 (±0.039), X.X=±0.5 (±0.020), X.XX=±0.25 (±0.010), X.XXX=±0.127 (±0.005). LEAD SIZE=±0.05 (±0.002), LEAD LENGTH=±0.75 (±0.030). MIN= +DECIMAL PRECISION −0.00 MAX.= +0.00 −DECIMAL PRECISION

REV.	PART NUMBER
A	LDS-SMA3003RI-TR

0.30" SMT 7 SEGMENT DISPLAY, COMMON ANODE,
585nm YELLOW LEDS,
GRAY FACE WITH WHITE SEGMENTS.

CONFIDENTIAL INFORMATION
THE INFORMATION CONTAINED IN THIS DOCUMENT IS THE PROPERTY OF LUMEX INC. EXCEPT AS SPECIFICALLY AUTHORIZED IN WRITING BY LUMEX INC., THE HOLDER OF THIS DOCUMENT SHALL KEEP ALL INFORMATION CONTAINED HEREIN CONFIDENTIAL AND SHALL PROTECT SAME IN WHOLE OR IN PART FROM DISCLOSURE AND DISSEMINATION TO ALL THIRD PARTIES.

RELIABILITY NOTE
OUR MANY YEARS OF EXPERIENCE DATA ACCUMULATION INDICATE THAT SOLDER HEAT IS A MAJOR CAUSE OF EARLY AND FUTURE FAILURE. PLEASE PAY ATTENTION TO YOUR SOLDERING PROCESS.

LUMEX INC. We Tame Photons To Work For You
290 E. HELEN ROAD
PALATINE, IL 60067-6976
PHONE: +1.847.359.2790
US WEB: www.lumex.com
TW WEB: www.lumex.com.tw

DRAWN BY:	CHECKED BY:	APPROVED BY:	DATE: 9.5.03
GB			PAGE: 1 OF 1
			SCALE: N/A