PART NUMBER	LDT-N4002RI	REV	B

REV	E.C.N. NUMBER AND REVISION COMMENTS	DATE
A	E.C.N#10BRDR & REDRAWN	07.25.12
B	ECN-Lumex202300040	03.10.23

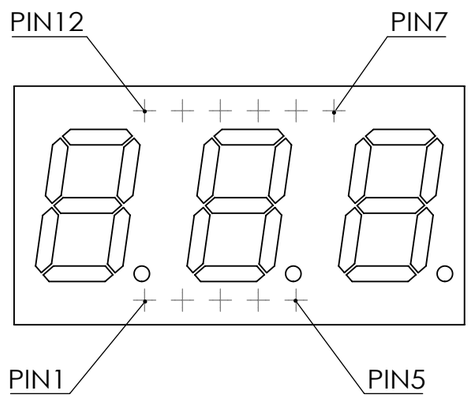

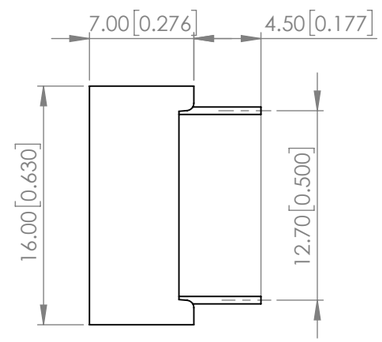

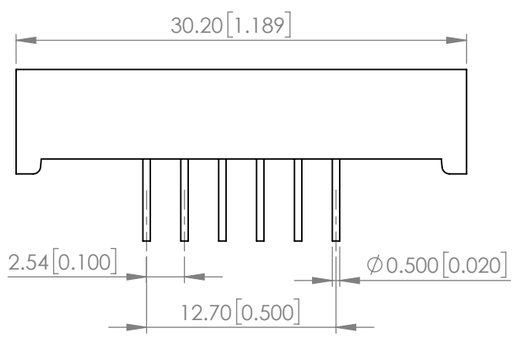

DIGIT DETAIL

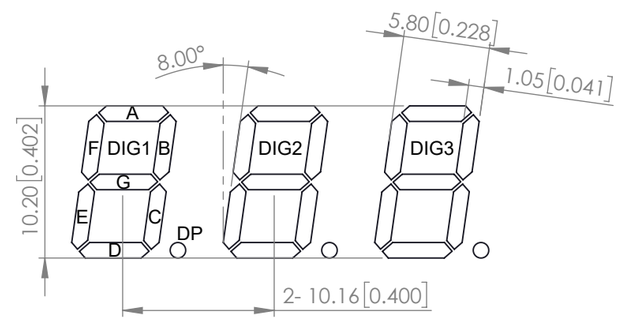

CIRCUIT DIAGRAM

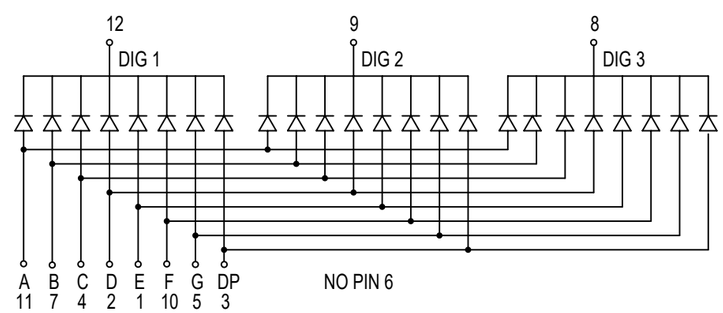

ELECTRO-OPTICAL CHARACTERISTIC TA=25℃ PER SEGMENT

PARAMETER	MIN	TYP	MAX	UNITS	TEST COND
PEAK WAVELENGHT	-	565	-	nm	If=10mA
FORWARD VOLTAGE	-	2.2	2.6	Vf	If=10mA
REVERSE CURRENT	-	-	100	uA	V_R=5V
LUMINOUS INTENSITY	-	2500	-	ucd	If=10mA
EMITTED COLOR	GREEN				
FACE COLOR	GRAY				
SEGMENT COLOR	MILKY WHITE DIFFUSED				

ABSOLUTE MAXIMUM RATINGS TA=25℃ PER SEGMENT

PARAMETER	MAX	UNITS
PEAK FORWARD CURRENT*	100	mA
FORWARD CURRENT	25	mA
POWER DISSIPATION	65	mW
REVERSE VOLTAGE	5	V
STORAGE TEMPERATURE	-35 TO +85	℃
OPERATING TEMPERATURE	-35 TO +85	℃
SOLDERING TEMPERATURE**	3 SEC MAX. @ 260	℃

*** 1/10 Duty,10KHz**

**** AT 2mm DISTANCE FROM THE CASE OF REFLECTOR EDGE.**

*UNLESS OTHERWISE SPECIFIED TOLERANCES PER DECIMAL PRECISION ARE: X=±1 (±0.039), X.X=±0.5 (±0.020), X.XX=±0.25 (±0.010), X.XXX=±0.127 (±0.005). LEAD SIZE=±0.05 (±0.002), LEAD LENGTH=±0.75 (±0.030). MIN= $^{+\text{DECIMAL PRECISION}}_{-0.00}$ MAX.= $^{+0.00}_{-\text{DECIMAL PRECISION}}$

LUMEX® Creating LED and LCD Solutions Together™

425 N. GARY AVE.
CAROL STREAM, IL 60188
PHONE : 800-278-5666
FAX : 630-315-2150
WEB : WWW.LUMEX.COM

0.4" 3 DIGIT, SEVEN SEGMENT LED DISPLAY, 565nm GREEN, COMMOM CATHODE, GRAY FACE, MILKY WHITE DIFFUSED, MULTIPLEXED.

****THE SPECIFICATIONS MAY CHANGE AT ANY TIME WITHOUT NOTICE.****

CONFIDENTIAL INFORMATION

THE INFORMATION CONTAINED IN THIS DOCUMENT IS THE PROPERTY OF LUMEX INC. EXCEPT AS SPECIFICALLY AUTHORIZED IN WRITING BY LUMEX INC., THE HOLDER OF THIS DOCUMENT SHALL KEEP ALL INFORMATION CONTAINED HEREIN CONFIDENTIAL AND SHALL PROTECT SAME IN WHOLE OR IN PART FROM DISCLOSURE AND DISSEMINATION TO ALL THIRD PARTIES.

DATE : 2023.03.10	DRAWN BY : E.C.
PAGE : 1 OF 1	CHKD BY : T.S.
SCALE : NTF	APRVD BY : G.Y.
UNIT : mm [INCH]	Pb