UNCONTROLLED DOCUMENT

SC:0.25	PART NUMBER	REV.
	OED–LDC13001EAB	

PRELIMINARY IN P/N DIR

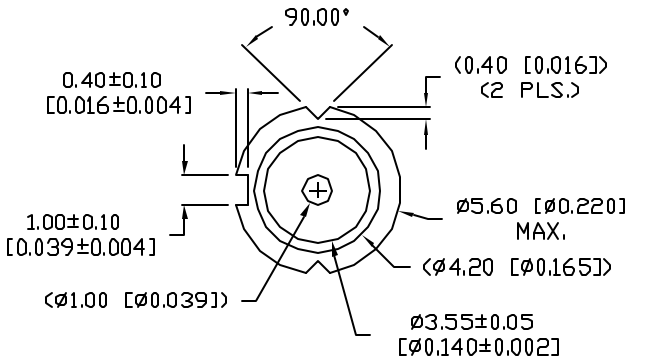

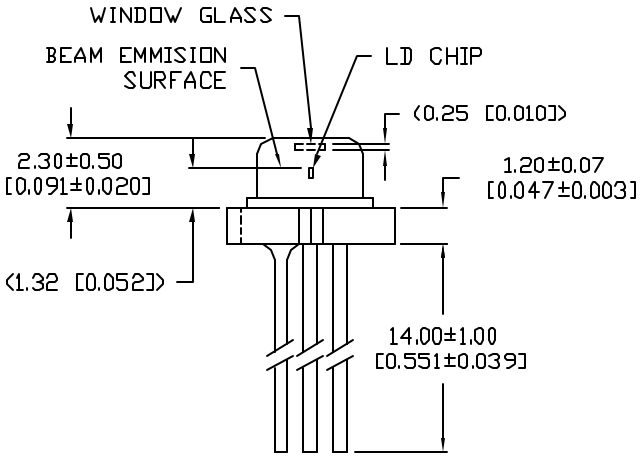

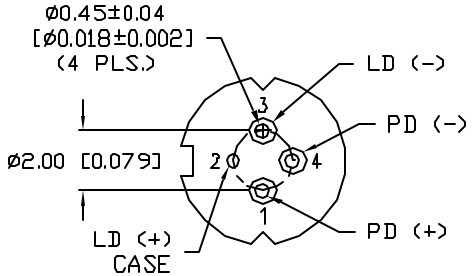

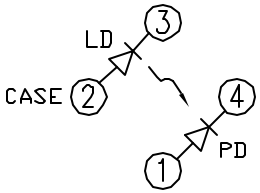

ELECTRO–OPTICAL CHARACTERISTICS (Tc=25°C), Po=5mW

PARAMETER	SYMBOL	MIN	TYP	MAX	TEST COND	UNITS
LASING WAVELENGTH	λ	1290	1310	1330	CW	nm
SPECTRAL WIDTH	Δλ		2	5	CW	nm
FORWARD VOLTAGE	Vf		1.2	1.5	CW	V
THRESHOLD CURRENT	Ith		12	20		mA
PD MONITOR CURRENT	Im	100			CW $V_{R(PD)}$=2V	µA
PD DARK CURRENT	$I_{(DARK)}$			0.1	$V_{R(PD)}$=5V	µA
PD CAPACITANCE	Ct		6	15	$V_{R(PD)}$=5V, f=1MHz	pF
RISE TIME	Tr			0.5	CW, Ibias=Ith,	ns
FALL TIME	Tf			0.5	10–90%	ns
SLOPE EFFICIENCY		0.30	0.35			mW/mA
BEAM DIVERGENCE:	θ//		20		CW,	deg.
	θ⊥		40		FWHM	deg.

ABSOLUTE MAXIMUM RATINGS (Tc=25°C)

PARAMETER	SYMBOL	MAX	UNITS
OPTICAL POWER	Po	10(CW)	mW
LD REVERSE VOLTAGE	$V_{R(LD)}$	2	V
PD REVERSE VOLTAGE	$V_{R(PD)}$	15	V
PD FORWARD CURRENT	$I_{F(PD)}$	1.0	mA
OPERATING TEMP.	Top	– 40 TO +85	°C
STORAGE TEMP.	Tstg	– 40 TO +85	°C

WARNING
INVISIBLE LASER RADIATION,
AVOID DIRECT EXPOSURE TO BEAM.

CAUTION: STATIC SENSITIVE DEVICE
FOLLOW PROPER E.S.D. HANDLING PROCEDURES
WHEN WORKING WITH THIS PART.

UNCONTROLLED DOCUMENT

*UNLESS OTHERWISE SPECIFIED TOLERANCES PER DECIMAL PRECISION ARE: X=±1 (±0.039), X.X=±0.5 (±0.020), X.XX=±0.25 (±0.010), X.XXX=±0.127 (±0.005). LEAD SIZE=±0.05 (±0.002), LEAD LENGTH=±0.75 (±0.030). MIN= +DECIMAL PRECISION −0.00 MAX.= +0.00 −DECIMAL PRECISION

REV.	PART NUMBER	CONFIDENTIAL INFORMATION	LUMEX INCORPORATED	DRAWN BY:	CHECKED BY:	APPROVED BY:	DATE: 5–3–00
	OED–LDC13001EAB	THE INFORMATION CONTAINED IN THIS DOCUMENT IS THE PROPERTY OF LUMEX INC. EXCEPT AS SPECIFICALLY AUTHORIZED IN WRITING BY LUMEX INC., THE HOLDER OF THIS DOCUMENT SHALL KEEP ALL INFORMATION CONTAINED HEREIN CONFIDENTIAL AND SHALL PROTECT SAME IN WHOLE OR IN PART FROM DISCLOSURE AND DISSEMINATION TO ALL THIRD PARTIES.	290 E. HELLEN ROAD PALATINE, ILLINOIS 60067 PHONE: (847) 359–2790 WEB: http://www.lumex.com	SK			PAGE: 1 OF 1
1310nm LASER DIODE, TO–18 (ø5.6mm) PACKAGE, 10mW OUTPUT.		RELIABILITY NOTE OUR MANY YEARS OF EXPERIENCE DATA ACCUMULATION INDICATE THAT SOLDER HEAT IS A MAJOR CAUSE OF EARLY AND FUTURE FAILURE. PLEASE PAY ATTENTION TO YOUR SOLDERING PROCESS.					SCALE: N/A