PART NUMBER	SLX-LX3054ID	REV	B

REV	E.C.N. NUMBER AND REVISION COMMENTS	DATE
A	E.C.N. #11148.	05.11.07
B	ECN-Lumex201800004	01.22.18

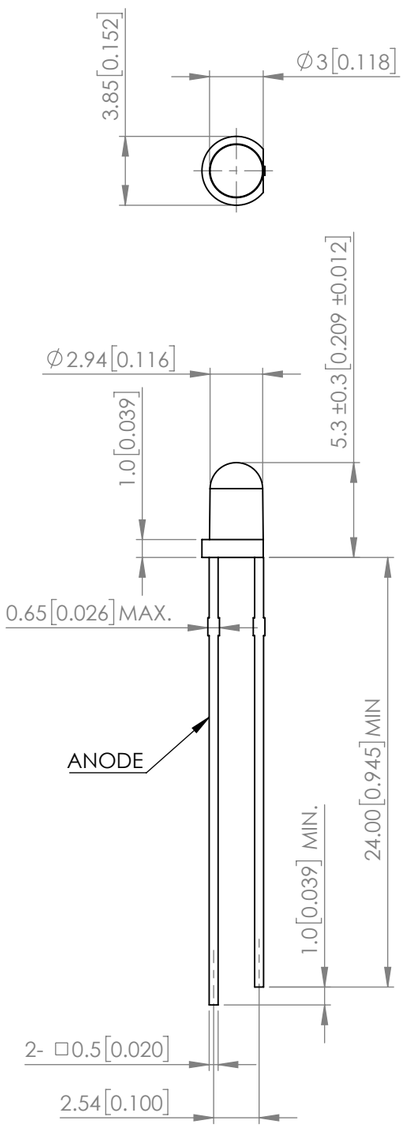

ELECTRO-OPTICAL CHARACTERISTIC TA=25℃

PARAMETER	MIN	TYP	MAX	UNITS	TEST COND
DOMINANT WAVELENGTH	-	640	-	nm	If=20mA
FORWARD VOLTAGE	-	2.0	2.4	Vf	If=20mA
REVERSE CURRENT	-	-	10	uA	V_R=5V
LUMINOUS INTENSITY	-	50	-	mcd	If=20mA
VIEWING ANGLE	-	35	-	2x theta1/2	-
EMITTED COLOR	RED				
EPOXY LENS FINISH	RED DIFFUSED				

ABSOLUTE MAXIMUM RATINGS TA=25℃

PARAMETER	MAX	UNITS
PEAK FORWARD CURRENT*	100	mA
FORWARD CURRENT	20	mA
REVERSE VOLTAGE	5	V
POWER DISSIPATION	80	mW
STORAGE TEMPERATURE	-40 TO +80	℃
OPERATING TEMPERATURE	-40 TO +80	℃
SOLDERING TEMPERATURE	3 SEC. MAX. @260	℃

***t<10us**

STATIC DEVICE FOLLOW PROPER
E.S.D. HANDLING PROCEDURES
WHEN WORKING WITH THIS PART

*UNLESS OTHERWISE SPECIFIED TOLERANCES PER DECIMAL PRECISION ARE: X=±1 (±0.039), X.X=±0.5 (±0.020), X.XX=±0.25 (±0.010), X.XXX=±0.127 (±0.005). LEAD SIZE=±0.05 (±0.002), LEAD LENGTH=±0.75 (±0.030). MIN= +DECIMAL PRECISION -0.00 MAX.= +0.00 -DECIMAL PRECISION

LUMEX® Creating LED and LCD Solutions Together™
425 N. GARY AVE.
CAROL STREAM, IL 60188
PHONE : 800-278-5666
FAX : 630-315-2150
WEB : WWW.LUMEX.COM

∅3*5.3(H)mm, T-3 (T-1) LED, RED DIFFUSED.

****THE SPECIFICATIONS MAY CHANGE AT ANY TIME WITHOUT NOTICE DUE TO NEW MATERIALS OR PRODUCT IMPROVEMENT.****

CONFIDENTIAL INFORMATION
THE INFORMATION CONTAINED IN THIS DOCUMENT IS THE PROPERTY OF LUMEX INC. EXCEPT AS SPECIFICALLY AUTHORIZED IN WRITING BY LUMEX INC., THE HOLDER OF THIS DOCUMENT SHALL KEEP ALL INFORMATION CONTAINED HEREIN CONFIDENTIAL AND SHALL PROTECT SAME IN WHOLE OR IN PART FROM DISCLOSURE AND DISSEMINATION TO ALL THIRD PARTIES.

DATE : 2018.01.22	DRAWN BY : C.C.
PAGE : 1 OF 1	CHKD BY : E.C.
SCALE : NTF	APRVD BY : G.Y.
UNIT : mm [INCH]	Pb