UNCONTROLLED DOCUMENT

PART NUMBER

SML-LXL1307UEGC-TR

REV.

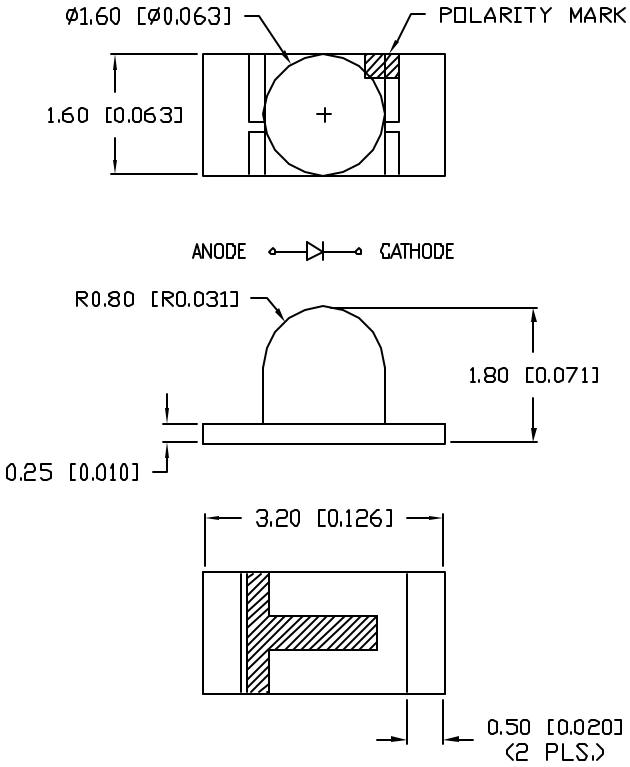

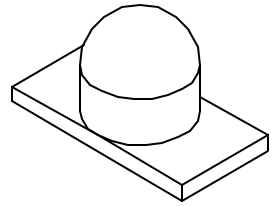

REFLOW PROFILE

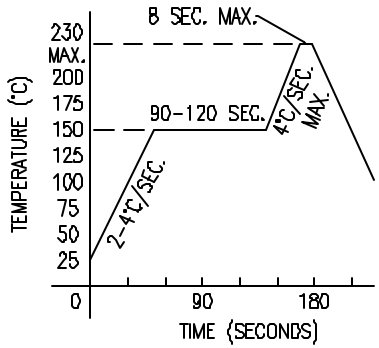

ELECTRO-OPTICAL CHARACTERISTICS T_A=25°C I_f=20mA

PARAMETER	MIN	TYP	MAX	UNITS	TEST COND
PEAK WAVELENGTH		505		nm	
FORWARD VOLTAGE		3.5	4.0	V_f	
REVERSE VOLTAGE	5.0			V_r	I_r=100µA
AXIAL INTENSITY		500		mcd	I_f=20mA
VIEWING ANGLE		50		2x theta	
EMITTED COLOR:	ULTRA EMERALD GREEN				
EPOXY LENS FINISH:	WATER CLEAR				

LIMITS OF SAFE OPERATION AT 25°C

PARAMETER	MAX	UNITS
PEAK FORWARD CURRENT*	150	mA
STEADY CURRENT	25	mA
POWER DISSIPATION	105	mW
DERATE FROM 25°C	—1.6	mW/°C
OPERATING, STORAGE TEMP.	−40 TO +85	°C

* t<10µS

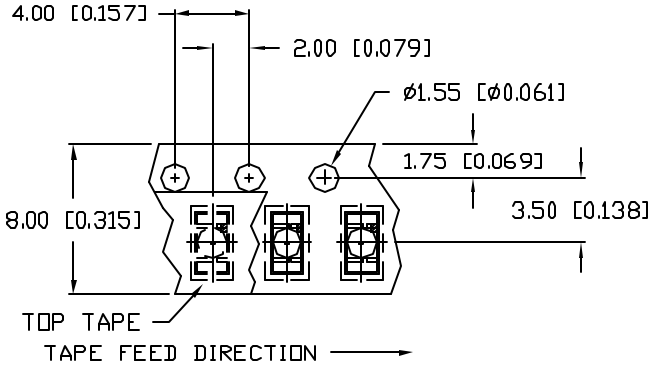

RECOMMENDED SOLDER PAD LAYOUT

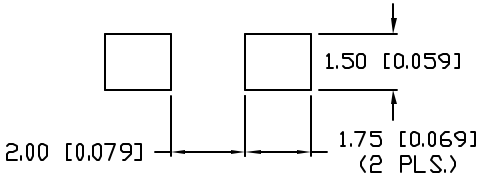

NOTES:

1. 1,500 PIECES PER REEL.
2. THE POLARITY MARK IS ORIENTED TOWARDS THE TAPE SPROCKET HOLE.

CAUTION: STATIC SENSITIVE DEVICE
FOLLOW PROPER E.S.D. HANDLING PROCEDURES WHEN WORKING WITH THIS PART.

CAUTION: MOISTURE SENSITIVE DEVICE
1. SHELF LIFE IN SEALED BAG: 12 MONTHS AT <40°C AND <90% RELATIVE HUMIDITY (RH).
2. AFTER THIS BAG IS OPENED, DEVICES HAVE TO BE MOUNTED WITHIN 48 HOURS OR STORED AT <30% RH.

UNCONTROLLED DOCUMENT

*UNLESS OTHERWISE SPECIFIED TOLERANCES PER DECIMAL PRECISION ARE: X=±1 (±0.039), X.X=±0.5 (±0.020), X.XX=±0.25 (±0.010), X.XXX=±0.127 (±0.005). LEAD SIZE=±0.05 (0.002), LEAD LENGTH=±0.75 (±0.030). MIN= +DECIMAL PRECISION −0.00 MAX.= +0.00 −DECIMAL PRECISION

REV.

PART NUMBER

SML-LXL1307UEGC-TR

3.2mm x 1.6mm PCB SURFACE MOUNT LED, 505nm ULTRA EMERALD GREEN LED, WATER CLEAR DOME LENS, TAPE AND REEL.

CONFIDENTIAL INFORMATION
THE INFORMATION CONTAINED IN THIS DOCUMENT IS THE PROPERTY OF LUMEX INC. EXCEPT AS SPECIFICALLY AUTHORIZED IN WRITING BY LUMEX INC., THE HOLDER OF THIS DOCUMENT SHALL KEEP ALL INFORMATION CONTAINED HEREIN CONFIDENTIAL AND SHALL PROTECT SAME IN WHOLE OR IN PART FROM DISCLOSURE AND DISSEMINATION TO ALL THIRD PARTIES.

RELIABILITY NOTE
OUR MANY YEARS OF EXPERIENCE DATA ACCUMULATION INDICATE THAT SOLDER HEAT IS A MAJOR CAUSE OF EARLY AND FUTURE FAILURE. PLEASE PAY ATTENTION TO YOUR SOLDERING PROCESS.

290 E. HELEN ROAD
PALATINE, IL 60067-6976
PHONE: +1.847.359.2790
US WEB: www.lumex.com
TW WEB: www.lumex.com.tw

DRAWN BY:	CHECKED BY:	APPROVED BY:	DATE: 5.2.01
CT			PAGE: 1 OF 1
			SCALE: N/A