UNCONTROLLED DOCUMENT

SC:0.75 PART NUMBER REV.

SSA-LXB18GYIWRA

PRELIMINARY IN P/N DIR

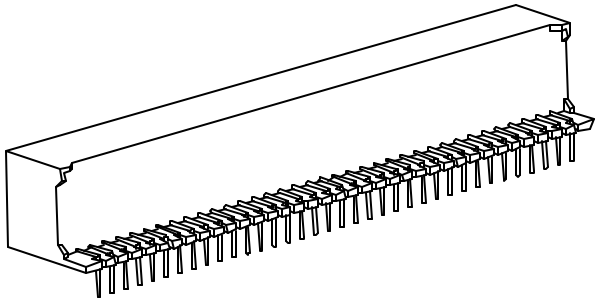

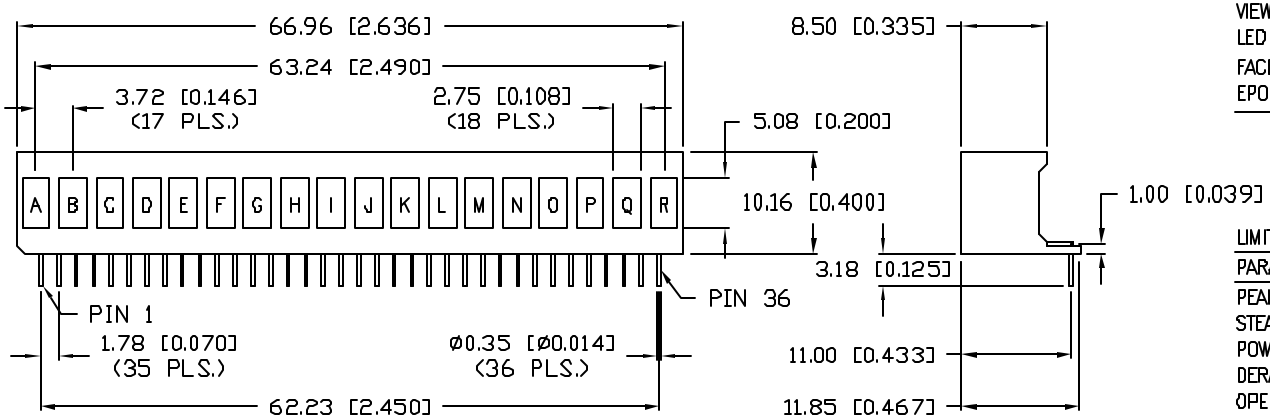

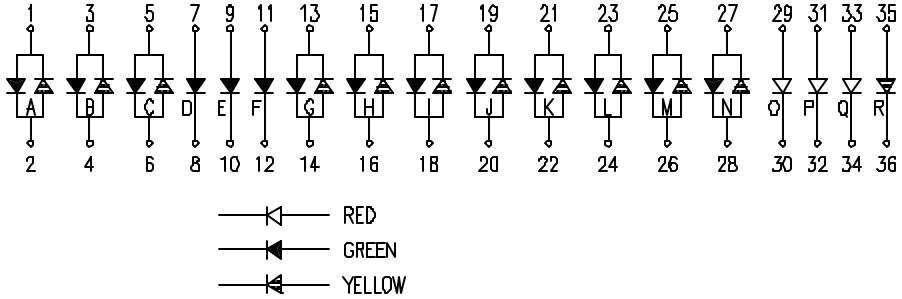

ELECTRO-OPTICAL CHARACTERISTICS T_A=25°C I_f=20mA

PARAMETER	RED	GREEN	YELLOW	UNITS	TEST COND
PEAK WAVELENGTH	635	565	585	nm	
FORWARD VOLTAGE (TYP.)	2.0	2.2	2.1	V_f	
FORWARD VOLTAGE (MAX.)	2.5	2.6	2.5	V_f	
REVERSE VOLTAGE	5.0	5.0	5.0	V_r	I_r=100µA
AXIAL INTENSITY	4	4	4	mcd	I_f=20mA
VIEWING ANGLE	160	160	160	2x theta	
LED POSITION:	O~Q	A~N	A~C, G~N, R		
FACE COLOR:	BLACK				
EPOXY LENS FINISH:	MILKY WHITE DIFFUSED				

LIMITS OF SAFE OPERATION AT 25°C PER CHIP

PARAMETER	COLORS	MAX	UNITS
PEAK FORWARD CURRENT*		150	mA
STEADY CURRENT	(R/G/Y)	30/25/30	mA
POWER DISSIPATION	(R/G/Y)	40/45/45	mW
DERATE FROM 25°C		-1.2	mW/°C
OPERATING, STORAGE TEMP.		- 40 TO +85	°C
SOLDERING TEMP.		+ 260	°C
2.0mm FROM BODY			3 SEC. MAX

* t<10µS

NOTES:

1. REFLECTOR MATERIAL: NORYL.
2. LUMEX PART NUMBER TO BE STAMPED ON THE SIDE OF REFLECTOR.

UNCONTROLLED DOCUMENT

*UNLESS OTHERWISE SPECIFIED TOLERANCES PER DECIMAL PRECISION ARE: X=±1 (±0.039), X.X=±0.5 (±0.020), X.XX=±0.25 (±0.010), X.XXX=±0.127 (±0.005). LEAD SIZE=±0.05 (±0.002), LEAD LENGTH=±0.75 (±0.030). MIN= +DECIMAL PRECISION −0.00 MAX.= +0.00 −DECIMAL PRECISION

REV. PART NUMBER SSA-LXB18GYIWRA

18 SEGMENT ARRAY, RED, GREEN, YELLOW ASSORTED, MILKY WHITE DIFFUSED SEGMENTS.

CONFIDENTIAL INFORMATION
THE INFORMATION CONTAINED IN THIS DOCUMENT IS THE PROPERTY OF LUMEX INC. EXCEPT AS SPECIFICALLY AUTHORIZED IN WRITING BY LUMEX INC., THE HOLDER OF THIS DOCUMENT SHALL KEEP ALL INFORMATION CONTAINED HEREIN CONFIDENTIAL AND SHALL PROTECT SAME IN WHOLE OR IN PART FROM DISCLOSURE AND DISSEMINATION TO ALL THIRD PARTIES.

RELIABILITY NOTE
OUR MANY YEARS OF EXPERIENCE DATA ACCUMULATION INDICATE THAT SOLDER HEAT IS A MAJOR CAUSE OF EARLY AND FUTURE FAILURE. PLEASE PAY ATTENTION TO YOUR SOLDERING PROCESS.

290 E. HELEN ROAD
PALATINE, IL 60067-6976
PHONE: +1.847.359.2790
US WEB: www.lumex.com
TW WEB: www.lumex.com.tw

DRAWN BY:	CHECKED BY:	APPROVED BY:	DATE: 12.5.01
KS/CT			PAGE: 1 OF 1
			SCALE: N/A