UNCONTROLLED DOCUMENT

PART NUMBER	SSB-CER7122UWW-SZ	REV.	B
DATE	E.C.N. NUMBER AND REVISION COMMENTS		REV.
12.02.11	E.C.N. #11772.		A
02.01.13	E.C.N. #11852.		B

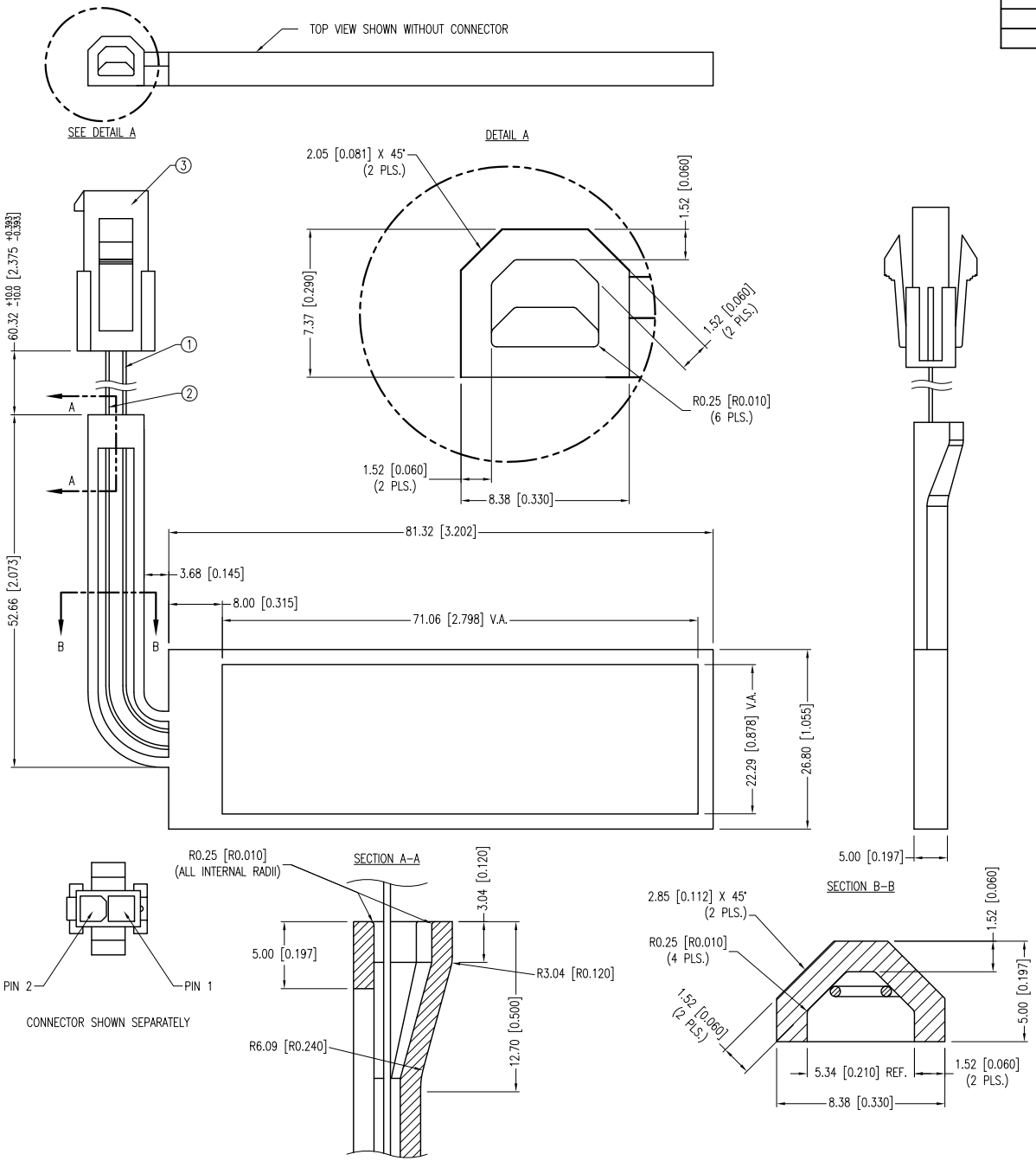

A ELECTRO-OPTICAL CHARACTERISTICS Ta=25°C If=20mA

PARAMETER	MIN	TYP	MAX	UNITS	TEST COND
FORWARD VOLTAGE		12		Vf	If=20mA
REVERSE VOLTAGE	5.0			Vr	Ir=10μA
LUMINOUS INTENSITY*		700		cd/m²	If=20mA
COLOR TEMP.**	5300		6100	°K	
EMITTED COLOR:	WHITE				
LENS FINISH:	WATER CLEAR				

*AXIAL INTENSITY TESTING CONDITION 550nm WAVELENGTH.
**THE ICI STANDARD COLORIMETRIC SYSTEM.

A LIMITS OF SAFE OPERATION AT 25°C

PARAMETER	MAX	UNITS
STEADY CURRENT	20	mA
POWER DISSIPATION	170	mW
DERATE FROM 25°C	−1.2	mW/°C
OPERATING TEMP.	−20 TO +70	°C
STORAGE TEMP.	−30 TO +80	°C
SOLDERING TEMP.	+260	°C
2.0mm FROM BODY	3	SEC.

A NOTES:

1. 6" 24 AWG WHITE STRANDED WIRE= ANODE NO OVERCOAT.
2. 6" 24 AWG WHITE W/BLACK STRIPE WIRE= CATHODE (GND) NO OVERCOAT.
3. MOLEX 39-01-2021 CONNECTOR, AND MOLEX 39-00-0048 TERMINALS OR EQUIVALENT.
4. HOLDER MATERIAL WHITE POLYCARBONATE #URZ 250.
5. RESISTOR 300Ω.

CAUTION: STATIC SENSITIVE DEVICE
FOLLOW PROPER E.S.D. HANDLING PROCEDURES WHEN WORKING WITH THIS PART.

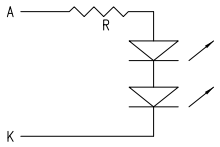

*UNLESS OTHERWISE SPECIFIED TOLERANCES PER DECIMAL PRECISION ARE: X=±1 (±0.039), X.X=±0.5 (±0.020), X.XX=±0.25 (±0.010), X.XXX=±0.127 (±0.005). LEAD SIZE=±0.05 (±0.002), LEAD LENGTH=±0.75 (±0.030). MIN= +DECIMAL PRECISION −0.00 MAX.= +0.00 −DECIMAL PRECISION

UNCONTROLLED DOCUMENT

LUMEX®
Creating LED and LCD Solutions Together™
290 E. HELEN ROAD
PALATINE, IL 60067-6976
PHONE: +1.847.359.2790
FAX: +1.847.359.6538
WEB: WWW.LUMEX.COM

71mm x 22mm V.A. CUSTOM EDGE LIT LED BACKLIGHT W/REFLECTOR, WHITE, ONE CHIP, 12V@ 20mA, W/WIRES.

THE SPECIFICATIONS MAY CHANGE AT ANY TIME WITHOUT NOTICE DUE TO NEW MATERIALS OR PRODUCT IMPROVEMENT.

CONFIDENTIAL INFORMATION
THE INFORMATION CONTAINED IN THIS DOCUMENT IS THE PROPERTY OF LUMEX INC. EXCEPT AS SPECIFICALLY AUTHORIZED IN WRITING BY LUMEX INC., THE HOLDER OF THIS DOCUMENT SHALL KEEP ALL INFORMATION CONTAINED HEREIN CONFIDENTIAL AND SHALL PROTECT SAME IN WHOLE OR IN PART FROM DISCLOSURE AND DISSEMINATION TO ALL THIRD PARTIES.

DATE:	03.21.11	DRAWN BY:	AB
PAGE:	1 OF 1	CHKD BY:	SS
SCALE:	NTS	APRVD BY:	KF
UNIT:	mm [INCH]	Pb	