UNCONTROLLED DOCUMENT

PART NUMBER	REV.
SSB-COB6370IW-T-7	

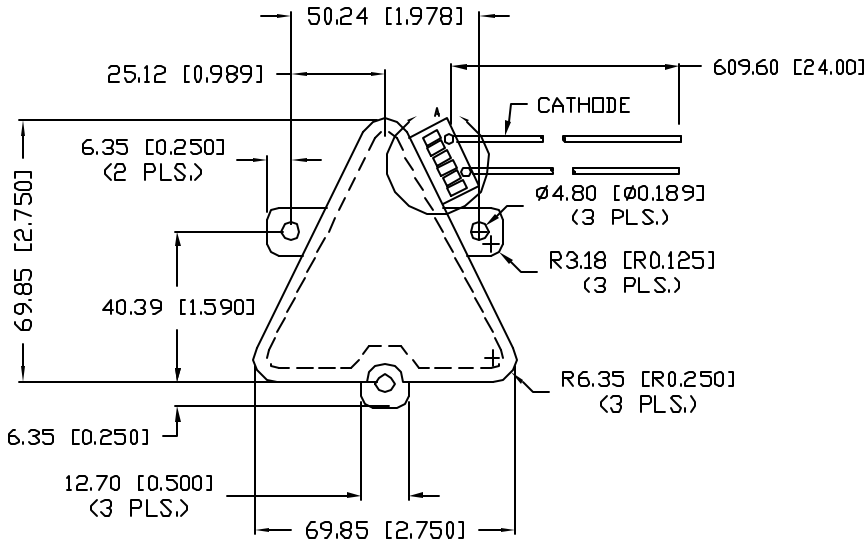

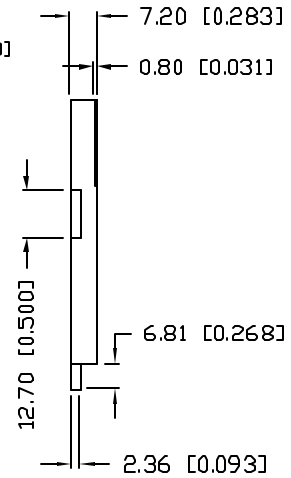

ELECTRO-OPTICAL CHARACTERISTICS T_A=25°C PER MODULE

PARAMETER	MIN	TYP	MAX	UNITS	TEST COND
PEAK WAVELENGTH		635 (RED)		nm	
FORWARD VOLTAGE		24		V_f	
REVERSE VOLTAGE	48			V_r	V_r=200μA
LUMINOUS INTENSITY		400		cd/m²	I_f=100mA
EMITTED COLOR:	RED				
REFLECTOR FINISH:	MILKY WHITE				

LIMITS OF SAFE OPERATION AT 25°C PER MODULE

PARAMETER	MAX	UNITS
PEAK FORWARD CURRENT*	150	mA
STEADY CURRENT	120	mA
POWER DISSIPATION	3.0	W
DERATE FROM 25°C	67.4	mW/°C
OPERATING TEMP.	−40 TO +85	°C
STORAGE TEMP.	−40 TO +85	°C
SOLDERING TEMP. 2.0mm FROM BODY	+260	°C 3 SEC. MAX

* t<10μS

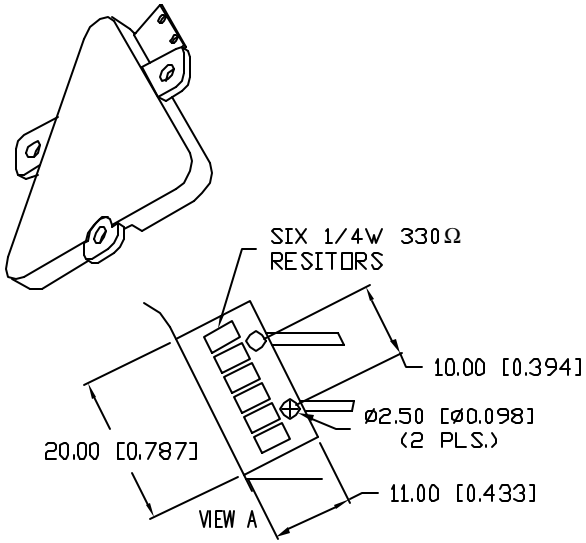

NOTES:

1. P.C.B. MAT'L.: FR4, DOUBLE SIDED.
2. ALL P.C.B. HOLES TO BE PLATED THRU.
3. ALL COPPER AND LEAD SOLDER CONNECTIONS TO BE COVERED WITH SOLDER MASK OR CONFORMAL COATING TO PREVENT CORROSION.
4. PART NUMBER SSB-COB 6370-24 TO APPEAR ON P.C.B.
5. ELECTRICAL CONNECTION TAB SIZE 5 x 12mm (0.197x0.472).
6. DASHED LINE INDICATES BOUNDARY OF LIGHTED AREA.
7. PROTECTIVE FILM SHOULD BE LEFT ON DIFFUSER TAPE.
8. ANODE LEAD: 24" 24AWG (TIN OVERCOAT) RED INSULATED WIRE. CUT 614mm, ONE END STRIPPED TO 4mm.
9. CATHODE LEAD: 24" 24AWG (TIN OVERCOAT) BLACK INSULATED WIRE. CUT 614mm, ONE END STRIPPED TO 4mm.
10. 330 OHM (1/4W) RESISTOR. (6 PCS.)

6 IN PARALLEL,
8 IN SERIES,
WITH 330 OHM RESISTOR. (6 PCS.)

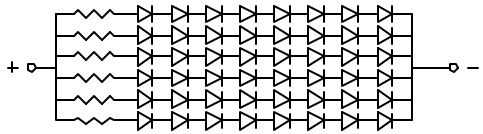

UNCONTROLLED DOCUMENT

*UNLESS OTHERWISE SPECIFIED TOLERANCES PER DECIMAL PRECISION ARE: X=±1 (±0.039), X.X=±0.5 (±0.020), X.XX=±0.25 (±0.010), X.XXX=±0.127 (±0.005). LEAD SIZE=±0.05 (±0.002), LEAD LENGTH=±0.75 (±0.030). MIN= +DECIMAL PRECISION −0.00 MAX.= +0.00 −DECIMAL PRECISION

REV.	PART NUMBER
	SSB-COB6370IW-T-7

TRIANGULAR BACKLIGHT DISPLAY, 48 CHIPS ON BOARD,
635nm RED CHIPS, 24 VOLT OPERATION.

CONFIDENTIAL INFORMATION
THE INFORMATION CONTAINED IN THIS DOCUMENT IS THE PROPERTY OF LUMEX INC. EXCEPT AS SPECIFICALLY AUTHORIZED IN WRITING BY LUMEX INC., THE HOLDER OF THIS DOCUMENT SHALL KEEP ALL INFORMATION CONTAINED HEREIN CONFIDENTIAL AND SHALL PROTECT SAME IN WHOLE OR IN PART FROM DISCLOSURE AND DISSEMINATION TO ALL THIRD PARTIES.

RELIABILITY NOTE
OUR MANY YEARS OF EXPERIENCE DATA ACCUMULATION INDICATE THAT SOLDER HEAT IS A MAJOR CAUSE OF EARLY AND FUTURE FAILURE. PLEASE PAY ATTENTION TO YOUR SOLDERING PROCESS.

LUMEX INCORPORATED
290 E. HELLEN ROAD
PALATINE, ILLINOIS 60067
PHONE: (847) 359-2790
WEB: http://www.lumex.com

DRAWN BY:	CHECKED BY:	APPROVED BY:	DATE: 7-27-00
BC			PAGE: 1 OF 1
			SCALE: N/A