UNCONTROLLED DOCUMENT

SC:0.25 PART NUMBER REV.

SSF-LXH104IGW-97

PRELIMINARY IN P/N DIR

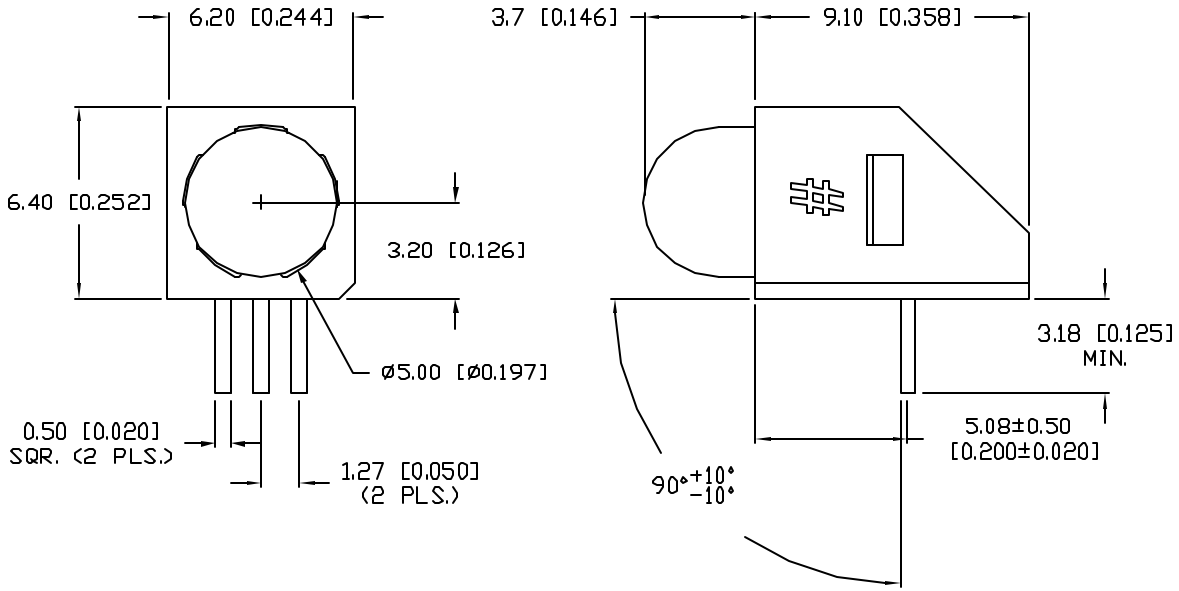

ELECTRO-OPTICAL CHARACTERISTICS T_A=25°C I_f=20mA

PARAMETER	MIN	TYP	MAX	UNITS	TEST COND
PEAK WAVELENGTH		635 (RED)		nm	
		565 (GREEN)		nm	
FORWARD VOLTAGE (R/G)		2.0/2.2	2.5/2.6	V_f	
REVERSE VOLTAGE	5.0			V_r	I_r=100µA
AXIAL INTENSITY		20		mcd	I_f=20mA
VIEWING ANGLE		60		2x theta	
EMITTED COLOR:	RED/GREEN				
EPOXY LENS FINISH:	MILKY WHITE DIFFUSED				

LIMITS OF SAFE OPERATION AT 25°C

PARAMETER	COLORS	MAX	UNITS
PEAK FORWARD CURRENT*		150	mA
STEADY CURRENT	(R/G)	30/25	mA
POWER DISSIPATION		105	mW
DERATE FROM 25°C		-1.2	mW/°C
OPERATING, STORAGE TEMP.		-40 TO +85	°C
SOLDERING TEMP. 2.0mm FROM BODY		+260	°C 3 SEC. MAX

* t<10µS

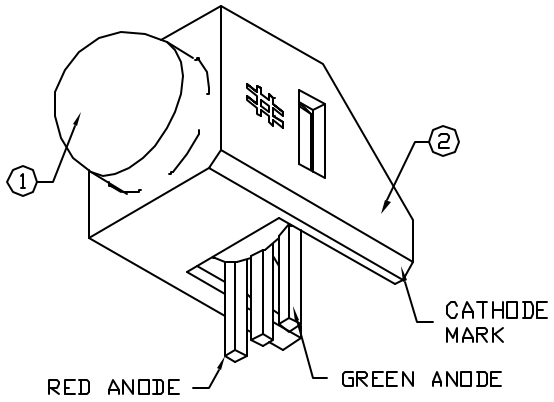

NOTES:

1. SSL-LX5097IGW, BICOLOR LED.
2. SSH-LXH104, HOLDER.

UNCONTROLLED DOCUMENT

*UNLESS OTHERWISE SPECIFIED TOLERANCES PER DECIMAL PRECISION ARE: X=±1 (±0.039), X.X=±0.5 (±0.020), X.XX=±0.25 (±0.010), X.XXX=±0.127 (±0.005). LEAD SIZE=±0.05 (±0.002), LEAD LENGTH=±0.75 (±0.030). MIN= +DECIMAL PRECISION -0.00 MAX.= +0.00 -DECIMAL PRECISION

REV. PART NUMBER SSF-LXH104IGW-97

T-3mm SINGLE LEVEL FAULT INDICATOR, BICOLOR 635nm RED, 565nm GREEN LED, MILKY WHITE DIFFUSED LENS.

CONFIDENTIAL INFORMATION
THE INFORMATION CONTAINED IN THIS DOCUMENT IS THE PROPERTY OF LUMEX INC. EXCEPT AS SPECIFICALLY AUTHORIZED IN WRITING BY LUMEX INC., THE HOLDER OF THIS DOCUMENT SHALL KEEP ALL INFORMATION CONTAINED HEREIN CONFIDENTIAL AND SHALL PROTECT SAME IN WHOLE OR IN PART FROM DISCLOSURE AND DISSEMINATION TO ALL THIRD PARTIES.

RELIABILITY NOTE
OUR MANY YEARS OF EXPERIENCE DATA ACCUMULATION INDICATE THAT SOLDER HEAT IS A MAJOR CAUSE OF EARLY AND FUTURE FAILURE. PLEASE PAY ATTENTION TO YOUR SOLDERING PROCESS.

LUMEX
290 E. HELEN ROAD
PALATINE, IL 60067-6976
PHONE: +1.847.359.2790
US WEB: www.lumex.com
TW WEB: www.lumex.com.tw

DRAWN BY:	CHECKED BY:	APPROVED BY:	DATE: 7.24.01
CT			PAGE: 1 OF 1
			SCALE: N/A