UNCONTROLLED DOCUMENT

PART NUMBER

SSF-LXH240IID-5V

REV.

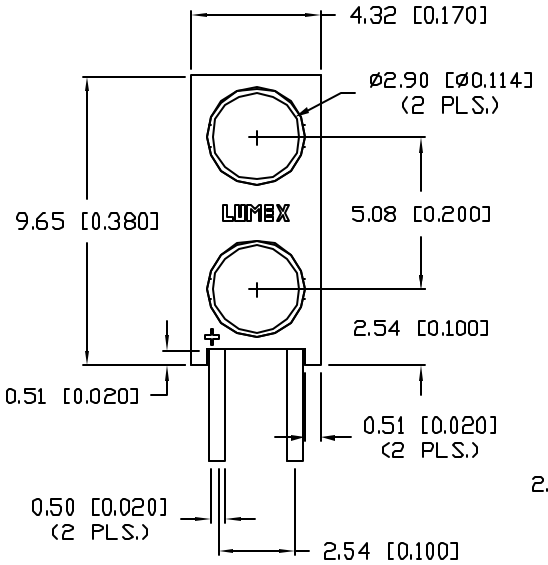

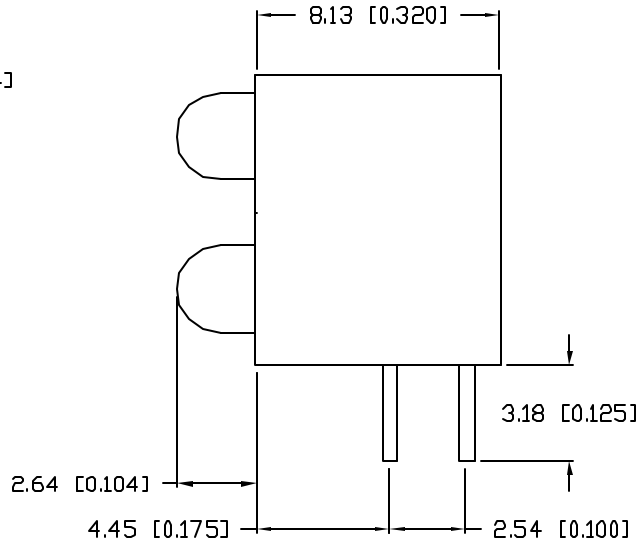

ELECTRO-OPTICAL CHARACTERISTICS T_A=25°C V_f =5V

PARAMETER	MIN	TYP	MAX	UNITS	TEST COND
PEAK WAVELENGTH		635		nm	
FORWARD VOLTAGE		5.0	7.5	V_f	
REVERSE VOLTAGE	5.0			V_r	I_r=100µA
AXIAL INTENSITY		15		mcd	Vf =5V
VIEWING ANGLE		60		2x theta	
EMITTED COLOR:	RED				
EPOXY LENS FINISH:	RED DIFFUSED				

LIMITS OF SAFE OPERATION AT 25°C

PARAMETER	COLORS	MAX	UNITS
PEAK FORWARD VOLTAGE		7	V
STEADY CURRENT		12	mA
POWER DISSIPATION		305	mW
DERATE FROM 25°C		−1.2	mW/°C
OPERATING, STORAGE TEMP.		−40 TO +85	°C
SOLDERING TEMP.		+260	°C
2.0mm FROM BODY			3 SEC. MAX

* t<10µS

NOTES:

1. SSH-LXH240 HOLDER, MATERIAL: BLACK NYLON 94V-0.
2. SSL-LX3044ID-5V LED (2 PCS.).

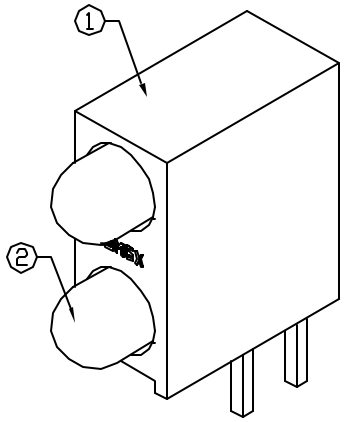

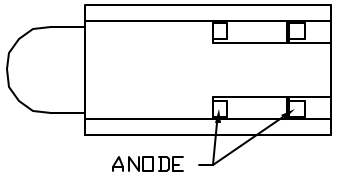

UNCONTROLLED DOCUMENT

*UNLESS OTHERWISE SPECIFIED TOLERANCES PER DECIMAL PRECISION ARE: X=±1 (±0.039), X.X=±0.5 (±0.020), X.XX=±0.25 (±0.010), X.XXX=±0.127 (±0.005). LEAD SIZE=±0.05 (±0.002), LEAD LENGTH=±0.75 (±0.030). MIN=$^{+\text{DECIMAL PRECISION}}_{-0.00}$ MAX.= $^{+0.00}_{-\text{DECIMAL PRECISION}}$

REV.

PART NUMBER

SSF-LXH240IID-5V

T-3mm RIGHT ANGLE FAULT INDICATOR LED,

DUAL 635nm RED LEDS, RED DIFFUSED, 5V OPREATION.

CONFIDENTIAL INFORMATION

THE INFORMATION CONTAINED IN THIS DOCUMENT IS THE PROPERTY OF LUMEX INC. EXCEPT AS SPECIFICALLY AUTHORIZED IN WRITING BY LUMEX INC., THE HOLDER OF THIS DOCUMENT SHALL KEEP ALL INFORMATION CONTAINED HEREIN CONFIDENTIAL AND SHALL PROTECT SAME IN WHOLE OR IN PART FROM DISCLOSURE AND DISSEMINATION TO ALL THIRD PARTIES.

RELIABILITY NOTE

OUR MANY YEARS OF EXPERIENCE DATA ACCUMULATION INDICATE THAT SOLDER HEAT IS A MAJOR CAUSE OF EARLY AND FUTURE FAILURE. PLEASE PAY ATTENTION TO YOUR SOLDERING PROCESS.

290 E. HELEN ROAD
PALATINE, IL 60067-6976
PHONE: +1.847.359.2790
US WEB: www.lumex.com
TW WEB: www.lumex.com.tw

DRAWN BY:	CHECKED BY:	APPROVED BY:	DATE: 8.8.05
JD			PAGE: 1 OF 1
			SCALE: N/A