UNCONTROLLED DOCUMENT

PART NUMBER	REV.
SSF-LXH306SOD-TR	

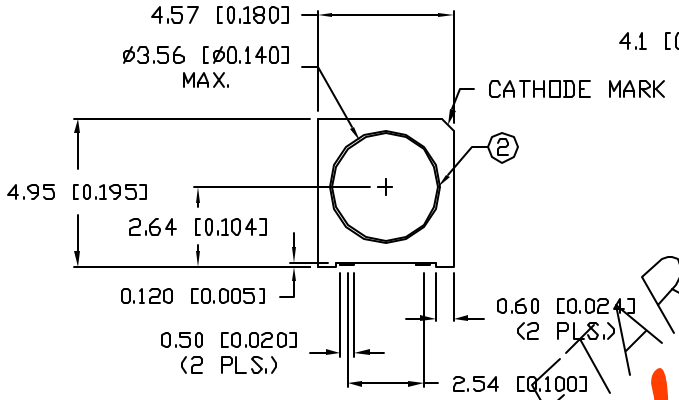

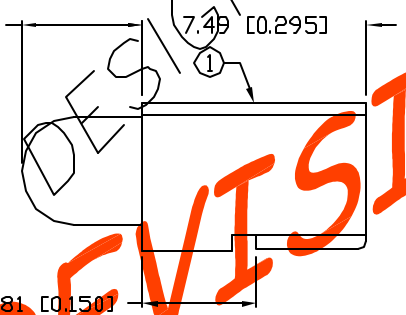

ELECTRO-OPTICAL CHARACTERISTICS T_A=25°C I_f= 20mA

PARAMETER	MIN	TYP	MAX	UNITS	TEST COND
PEAK WAVELENGTH		610		nm	
FORWARD VOLTAGE		2.0	2.5	Vf	
REVERSE VOLTAGE	5.0			Vr	I_r=100µA
AXIAL INTENSITY		250		mcd	I_f=20mA
VIEWING ANGLE		60		2x theta	
EMITTED COLOR:	ORANGE				
EPOXY LENS FINISH:	ORANGE DIFFUSED				

REFLOW PROFILE

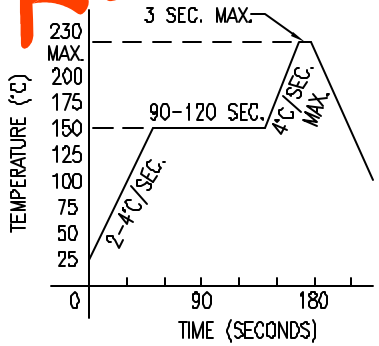

LIMITS OF SAFE OPERATION AT 25°C

PARAMETER	MAX	UNITS
PEAK FORWARD CURRENT*	150	mA
STEADY CURRENT	30	mA
POWER DISSIPATION	105	mW
DERATE FROM 25°C	-1.6	mW/°C
OPERATING, STORAGE TEMP.	-40 TO +85	°C
SOLDERING TEMP.	+260	°C
2.0mm FROM BODY		3 SEC. MAX

* t<10µS

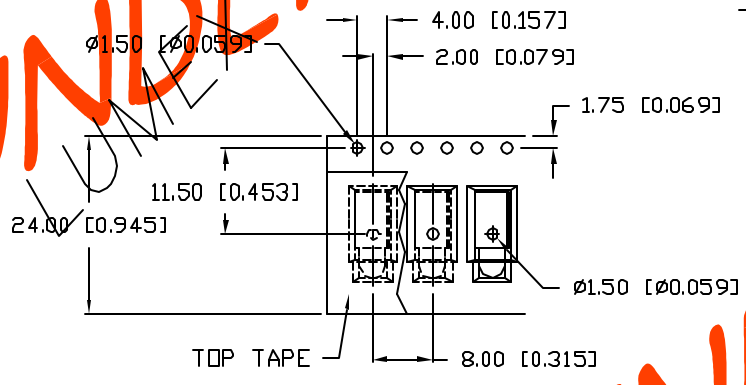

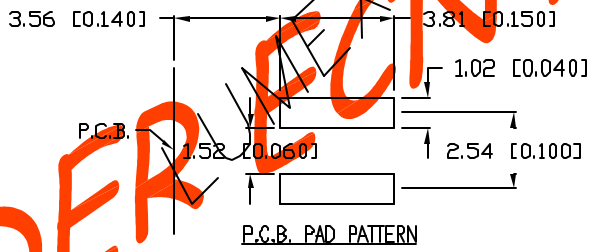

P.C.B. PAD PATTERN

NOTES:

1. SSH-LXH306 HOLDER, BLACK NYLON.
2. SSL-LX308F4SOD LED.
3. LXP-CARRIER24-56.
4. 1,000 PCS. PER REEL.

UNCONTROLLED DOCUMENT

*UNLESS OTHERWISE SPECIFIED TOLERANCES PER DECIMAL PRECISION ARE: X=±1 (±0.039), X.X=±0.5 (±0.020), X.XX=±0.25 (±0.010), X.XXX=±0.127 (±0.005). LEAD SIZE=±0.05 (±0.002), LEAD LENGTH=±0.75 (±0.030). MIN= +DECIMAL PRECISION -0.00 MAX.= +0.00 -DECIMAL PRECISION

UNDER ECN REVISION
PROPRIETARY DESIGN

REV.	PART NUMBER
	SSF-LXH306SOD-TR

T-3mm LED, RIGHT ANGLE SURFACE MOUNT,
610nm SUPER ORANGE LED, ORANGE DIFFUSED LENS.

CONFIDENTIAL INFORMATION
THE INFORMATION CONTAINED IN THIS DOCUMENT IS THE PROPERTY OF LUMEX INC. EXCEPT AS SPECIFICALLY AUTHORIZED IN WRITING BY LUMEX INC., THE HOLDER OF THIS DOCUMENT SHALL KEEP ALL INFORMATION CONTAINED HEREIN CONFIDENTIAL AND SHALL PROTECT SAME IN WHOLE OR IN PART FROM DISCLOSURE AND DISSEMINATION TO ALL THIRD PARTIES.

RELIABILITY NOTE
OUR MANY YEARS OF EXPERIENCE DATA ACCUMULATION INDICATE THAT SOLDER HEAT IS A MAJOR CAUSE OF EARLY AND FUTURE FAILURE. PLEASE PAY ATTENTION TO YOUR SOLDERING PROCESS.

LUMEX
290 E. HELEN ROAD
PALATINE, IL 60067-6976
PHONE: +1.847.359.2790
US WEB: www.lumex.com
TW WEB: www.lumex.com.tw

DRAWN BY:	CHECKED BY:	APPROVED BY:	DATE: 8.29.01
CT			PAGE: 1 OF 1
			SCALE: N/A