UNCONTROLLED DOCUMENT

PART NUMBER	REV.
SSF–LXH306SUGSICTR	A

REV.	E.C.N. NUMBER AND REVISION COMMENTS	DATE
A	E.C.N. #11447.	10.01.07

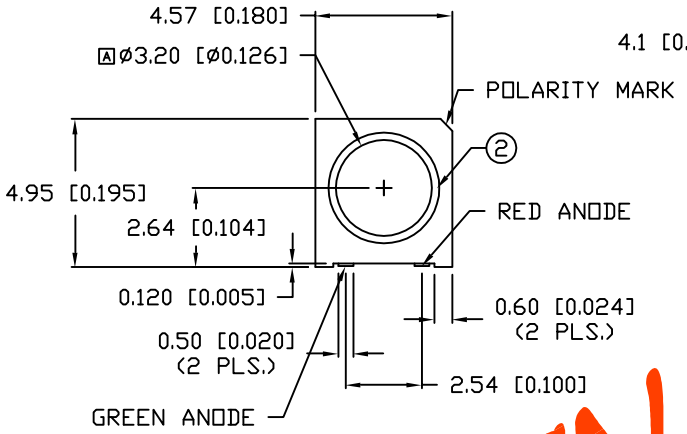

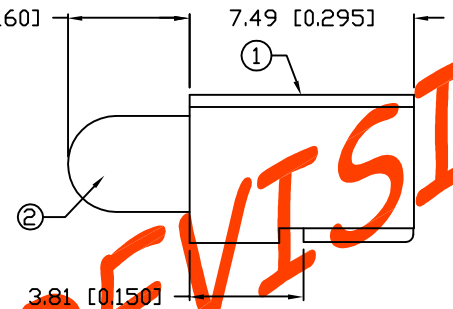

ELECTRO–OPTICAL CHARACTERISTICS T_A=25°C I_f=20mA

PARAMETER	MIN	TYP	MAX	UNITS	TEST COND
PEAK WAVELENGTH		574 (GREEN)		nm	
		636 (BLUE)		nm	
FORWARD VOLTAGE (G/R)		2.2/2.0	2.6/2.5	V_f	
REVERSE VOLTAGE	5.0			V_r	I_r=100µA
AXIAL INTENSITY (G/R)		120/200		mcd	If=20mA
VIEWING ANGLE		60		2x theta	

EMITTED COLOR: GREEN / RED

EPOXY LENS FINISH: WATER CLEAR

REFLOW PROFILE

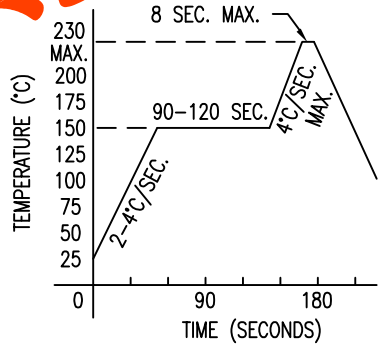

LIMITS OF SAFE OPERATION AT 25°C PER CHIP

PARAMETER	COLORS	MAX	UNITS
PEAK FORWARD CURRENT*		100	mA
STEADY CURRENT		30	mA
POWER DISSIPATION		90	mW
DERATE FROM 25°C		–1.2	mW/°C
OPERATING, STORAGE TEMP.		– 40 TO + 85	°C
SOLDERING TEMP.		+ 260	°C
2.0mm FROM BODY			3 SEC. MAX

* t<10µS

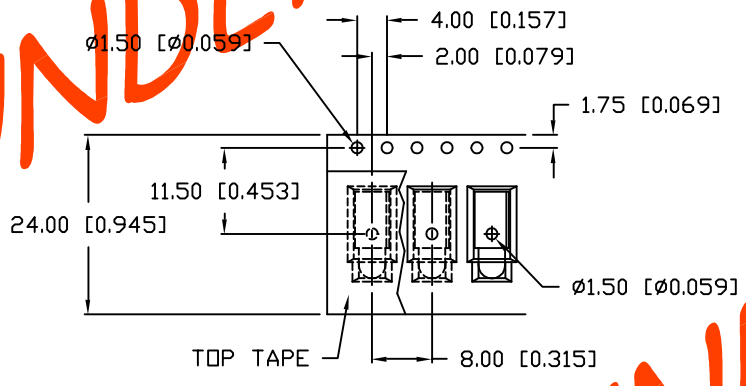

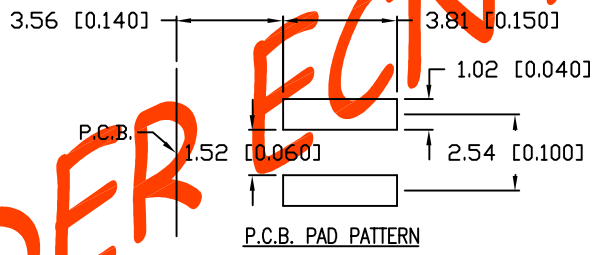

P.C.B. PAD PATTERN

NOTES:

1. SSH–LXH306 HOLDER, BLACK NYLON.
2. SSL–LX308F4SUGSIC LED, 0.4x0.5mm LEAD FRAME, HIGH TEMP EPOXY.
3. LXP–CARRIER24–56.
4. 1,000 PCS. PER REEL.

Pb

UNCONTROLLED DOCUMENT

*UNLESS OTHERWISE SPECIFIED TOLERANCES PER DECIMAL PRECISION ARE: X=±1 (±0.039), X.X=±0.5 (±0.020), X.XX=±0.25 (±0.010), X.XXX=±0.127 (±0.005). LEAD SIZE=±0.05 (±0.002), LEAD LENGTH=±0.75 (±0.030). MIN=+DECIMAL PRECISION –0.00 MAX.= +0.00 –DECIMAL PRECISION

UNDER ECN REVISION

UNDER ECN REVISION

UNDER ECN REVISION

REV.	PART NUMBER
A	SSF–LXH306SUGSICTR

T–3mm LED, RIGHT ANGLE SURFACE MOUNT, BI–COLOR 574nm SUPER GREEN/ 636nm HIGH INTENSITY, WATER CLEAR LENS.

CONFIDENTIAL INFORMATION

THE INFORMATION CONTAINED IN THIS DOCUMENT IS THE PROPERTY OF LUMEX INC. EXCEPT AS SPECIFICALLY AUTHORIZED IN WRITING BY LUMEX INC., THE HOLDER OF THIS DOCUMENT SHALL KEEP ALL INFORMATION CONTAINED HEREIN CONFIDENTIAL AND SHALL PROTECT SAME IN WHOLE OR IN PART FROM DISCLOSURE AND DISSEMINATION TO ALL THIRD PARTIES.

RELIABILITY NOTE

OUR MANY YEARS OF EXPERIENCE DATA ACCUMULATION INDICATE THAT SOLDER HEAT IS A MAJOR CAUSE OF EARLY AND FUTURE FAILURE. PLEASE PAY ATTENTION TO YOUR SOLDERING PROCESS.

LUMEX INC. We Tame Photons To Work For You

290 E. HELEN ROAD
PALATINE, IL 60067–6976
PHONE: +1.847.359.2790
US WEB: www.lumex.com
TW WEB: www.lumex.com.tw

DRAWN BY:	CHECKED BY:	APPROVED BY:	DATE: 11.28.05
JC			PAGE: 1 OF 1
			SCALE: N/A