PART NUMBER	SSI-LXR4815GD-150B	REV	E

REV	E.C.N. NUMBER AND REVISION COMMENTS	DATE
A	REDRAWN, UPDATED SAFE OPER. SPECS.	10.27.94
B	CORRECTED WIRE STRIP LENGTH.	11.17.94
C	E.C.N #10674	10.30.00
D	E.C.N #10BRDR. & REDRAWN IN 3D.	01.10.02
E	ECN-Lumex201800184	11.21.18

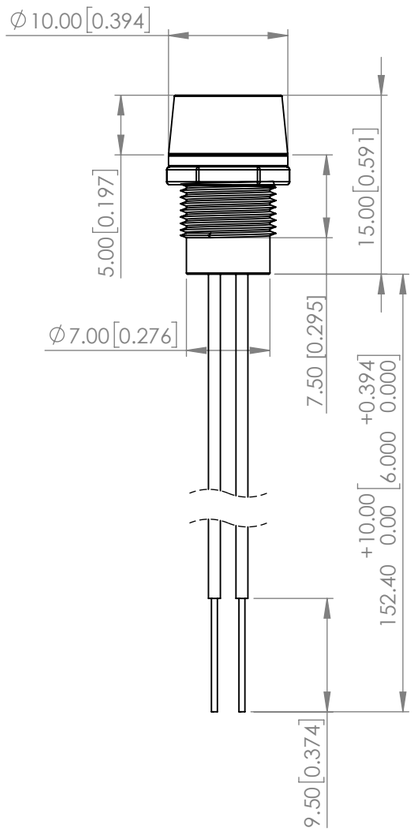

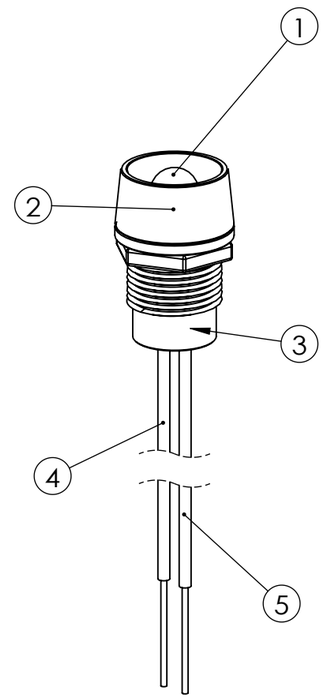

PLANT CUTOUT

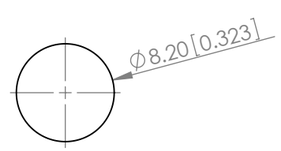

ELECTRO-OPTICAL CHARACTERISTIC TA=25℃

PARAMETER	MIN	TYP	MAX	UNITS	TEST COND
PEAK WAVELENGTH	-	565	-	nm	If=10mA
FORWARD VOLTAGE	-	2	2.4	Vf	If=10mA
REVERSE VOLTAGE	-	-	5	Vr	Ir=10uA
LUMINOUS INTENSITY	-	16	-	mcd	If=10mA
VIEWING ANGLE	-	60	-	2x theta1/2	-
EMITTED COLOR	GREEN				
EPOXY LENS FINISH	GREEN DIFFUSED				

ABSOLUTE MAXIMUM RATINGS TA=25℃

PARAMETER	MAX	UNITS
PEAK FORWARD CURRENT*	140	mA
FORWARD CURRENT	25	mA
POWER DISSIPATION	60	mW
STORAGE TEMPERATURE	-40 TO +85	℃
OPERATING TEMPERATURE	-40 TO +85	℃

***t<10us**

ITEM NO.	PARTS	QTY.	DESCRIPTION	
1	SSL-LX5063GD	1	GREEN LED. TRIM LEADS TO 5 MM.	
2	SSI-LXR4815-B	1	BLACK ANODIZED HOUSING.	
3	SSH-LXH4815BSC	1	BLACK NYLON BUSHING.(NOT SEEN)	
4	LXP-WST24RDTOC	1	ANODE	RED INSULATION, 160MM LONG, STRIP 2MM& 9.5MM.
5	LXP-WST24BLTOC	1	CATHODE	BLACK INSULATION, 160MM LONG, STRIP 2MM& 9.5MM.

*UNLESS OTHERWISE SPECIFIED TOLERANCES PER DECIMAL PRECISION ARE: X=±1 (±0.039), X.X=±0.5 (±0.020), X.XX=±0.25 (±0.010), X.XXX=±0.127 (±0.005). LEAD SIZE=±0.05 (±0.002), LEAD LENGTH=±0.75 (±0.030). MIN= +DECIMAL PRECISION -0.00 MAX.= +0.00 -DECIMAL PRECISION

LUMEX® Creating LED and LCD Solutions Together™
425 N. GARY AVE.
CAROL STREAM, IL 60188
PHONE : 800-278-5666
FAX : 630-315-2150
WEB : WWW.LUMEX.COM

T-5mm 565nm GaP GREEN LED PANET INDICATOR LED, GREEN DIFFUSED LENS, WITH 6" WIRE LEADS.

****THE SPECIFICATIONS MAY CHANGE AT ANY TIME WITHOUT NOTICE.****

CONFIDENTIAL INFORMATION
THE INFORMATION CONTAINED IN THIS DOCUMENT IS THE PROPERTY OF LUMEX INC. EXCEPT AS SPECIFICALLY AUTHORIZED IN WRITING BY LUMEX INC., THE HOLDER OF THIS DOCUMENT SHALL KEEP ALL INFORMATION CONTAINED HEREIN CONFIDENTIAL AND SHALL PROTECT SAME IN WHOLE OR IN PART FROM DISCLOSURE AND DISSEMINATION TO ALL THIRD PARTIES.

DATE : 2018.11.28	DRAWN BY : C.S.
PAGE : 1 OF 1	CHKD BY : E.C.
SCALE : NTF	APRVD BY : G.Y.
UNIT : mm [INCH]	Pb