UNCONTROLLED DOCUMENT

SC:0.50 PART NUMBER

SSI-RM3091USB19938

REV.

PRELIMINARY IN P/N DIR

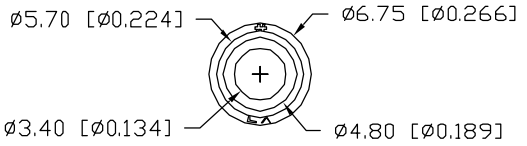

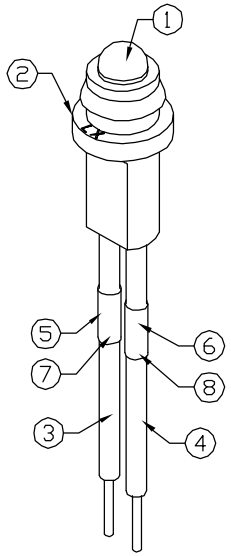

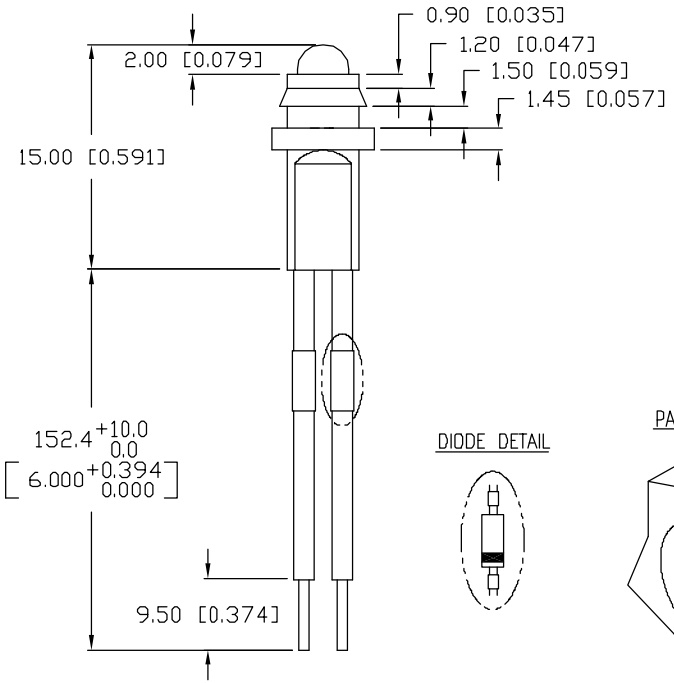

DIODE DETAIL

PANEL CUTOUT

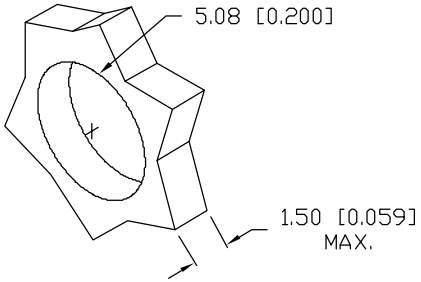

CAUTION: STATIC SENSITIVE DEVICE
FOLLOW PROPER E.S.D. HANDLING PROCEDURES
WHEN WORKING WITH THIS PART.

ELECTRO-OPTICAL CHARACTERISTICS T_A=25°C V_f=120 VAC

PARAMETER	MIN	TYP	MAX	UNITS	TEST COND
PEAK WAVELENGTH		470		nm	
FORWARD VOLTAGE		120		VAC	
AXIAL INTENSITY		100		mcd	V_f=120 VAC
VIEWING ANGLE		60		2x theta	
EMITTED COLOR:	BLUE				
EPOXY LENS FINISH:	BLUE DIFFUSED				

LIMITS OF SAFE OPERATION AT 25°C PER DIE

PARAMETER	MAX	UNITS
PEAK FORWARD VOLTAGE	160	VAC
STEADY CURRENT	12	mA
POWER DISSIPATION	150	mW
DERATE FROM 25°C	−1.2	mW/°C
OPERATING, STORAGE TEMP.	−40 TO +85	°C
SOLDERING TEMP.	+260	°C
2.0mm FROM BODY		3 SEC. MAX

NOTES:

1. SSL-LX306F4USBD, BLUE LED.
2. SSH-RM3091, BLACK RUBBER HOUSING.
3. ANODE LEAD: LXP-WST26RDTOC, 26 AWG STRANDED, RED INSULATION,
   CUT 40mm LONG, STRIP 2mm BOTH ENDS.
   CUT 113mm LONG, STRIP 3mm & 9.5mm.
4. CATHODE LEAD: LXP-WST26BLTOC, 26 AWG STRANDED, BLACK INSULATION,
   CUT 60mm LONG, STRIP 2mm BOTH ENDS.
   CUT 93mm LONG, STRIP 3mm & 9.5mm.
5. LXP-RES 10K 2W, : 10KΩ 2 WATT RESISTOR. CUT TO 22mm END TO END.
6. LXP-DIODE-1N4004: 1N4004 RECTIFIER DIODE. CUT TO 25mm END TO END.
7. LXP-HEATSHRINK-6, 3/16", 35mm BLACK HEATSHRINK.
8. LXP-HEATSHRINK-4, 1/8", 40mm BLACK HEATSHRINK.
9. RESISTOR AND DIODE ARE CRIMPED TO THE WIRES.
10. LED IS SOLDERED TO THE WIRE.

UNCONTROLLED DOCUMENT

*UNLESS OTHERWISE SPECIFIED TOLERANCES PER DECIMAL PRECISION ARE: X=±1 (±0.039), X.X=±0.5 (±0.020), X.XX=±0.25 (±0.010), X.XXX=±0.127 (±0.005). LEAD SIZE=±0.05 (±0.002), LEAD LENGTH=±0.75 (±0.030). MIN= +DECIMAL PRECISION −0.00 MAX.= +0.00 −DECIMAL PRECISION

REV.

PART NUMBER

SSI-RM3091USB19938

T-3mm 470nm InGaN/SiC BLUE LED PANEL INDICATOR,
BLUE DIFFUSED LENS, 6" WIRE LEADS, 120VAC.

CONFIDENTIAL INFORMATION
THE INFORMATION CONTAINED IN THIS DOCUMENT IS THE PROPERTY OF LUMEX INC. EXCEPT AS SPECIFICALLY AUTHORIZED IN WRITING BY LUMEX INC., THE HOLDER OF THIS DOCUMENT SHALL KEEP ALL INFORMATION CONTAINED HEREIN CONFIDENTIAL AND SHALL PROTECT SAME IN WHOLE OR IN PART FROM DISCLOSURE AND DISSEMINATION TO ALL THIRD PARTIES.

RELIABILITY NOTE
OUR MANY YEARS OF EXPERIENCE DATA ACCUMULATION INDICATE THAT SOLDER HEAT IS A MAJOR CAUSE OF EARLY AND FUTURE FAILURE. PLEASE PAY ATTENTION TO YOUR SOLDERING PROCESS.

LUMEX INC. We Tame Photons To Work For You
290 E. HELEN ROAD
PALATINE, IL 60067-6976
PHONE: +1.847.359.2790
US WEB: www.lumex.com
TW WEB: www.lumex.com.tw

DRAWN BY:	CHECKED BY:	APPROVED BY:	DATE: 6.13.03
CT			PAGE: 1 OF 1
			SCALE: N/A