UNCONTROLLED DOCUMENT

PART NUMBER	SSL-LX5093GT-5V-TR	REV.	B
DATE	E.C.N. NUMBER AND REVISION COMMENTS		REV.
10.19.06	E.C.N. #11148.		A
11.16.11	E.C.N. #10BRDR. & REDRAWN.		B

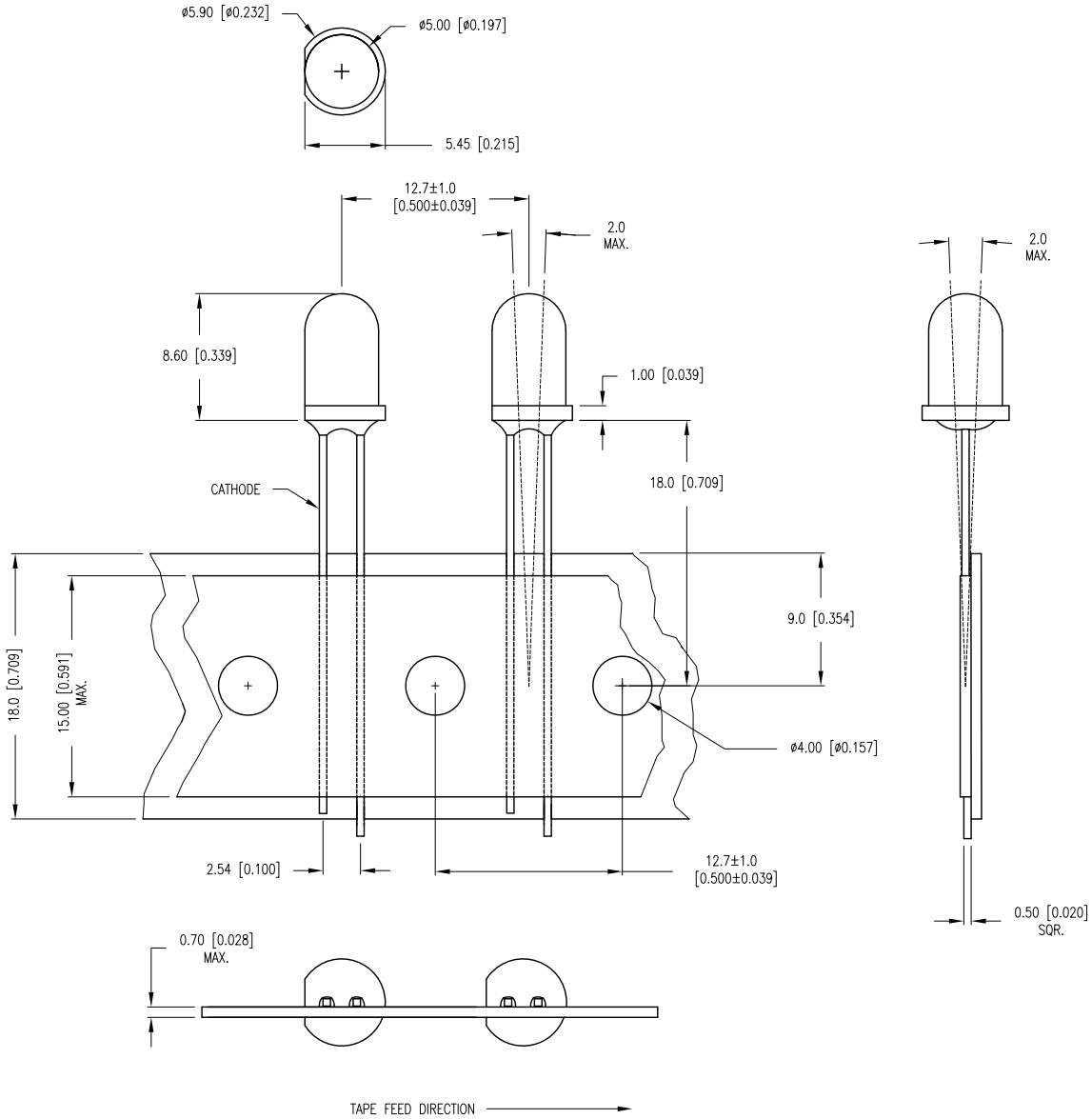

ELECTRO-OPTICAL CHARACTERISTICS Ta=25°C If=5V

PARAMETER	MIN	TYP	MAX	UNITS	TEST COND
PEAK WAVELENGTH		565		nm	
FORWARD VOLTAGE		5.0	7.0	Vf	
REVERSE VOLTAGE	5.0			Vr	Ir=100µA
AXIAL INTENSITY		80		mcd	If=5V
VIEWING ANGLE		30		2x theta	
EMITTED COLOR:	GREEN				
EPOXY LENS FINISH:	GREEN TRANSPARENT				

LIMITS OF SAFE OPERATION AT 25°C

PARAMETER	MAX	UNITS
PEAK FORWARD VOLTAGE	7.0	V
STEADY CURRENT	12	mA
POWER DISSIPATION	310	mW
DERATE FROM 25°C	-1.2	mW/°C
OPERATING TEMP.	-40 TO +85	°C
STORAGE TEMP.	-40 TO +85	°C
SOLDERING TEMP.	+260	°C
2.0mm FROM BODY	3	SEC.

*UNLESS OTHERWISE SPECIFIED TOLERANCES PER DECIMAL PRECISION ARE: X=±1 (±0.039), X.X=±0.5 (±0.020), X.XX=±0.25 (±0.010), X.XXX=±0.127 (±0.005). LEAD SIZE=±0.05 (±0.002), LEAD LENGTH=±0.75 (±0.030). MIN= +DECIMAL PRECISION -0.00 MAX.= +0.00 -DECIMAL PRECISION

UNCONTROLLED DOCUMENT

LUMEX®
Creating LED and LCD Solutions Together™
425 N. GARY AVE.
CAROL STREAM, IL 60188-4900
PHONE: +1.800.278.5666
FAX: +1.630.315.2152
WEB: WWW.LUMEX.COM
MEMBER OF ITW PHOTONICS GROUP

QUASARBRITE T-5mm (T-1 3/4) 565nm GREEN LED, 5V OPERATION, GREEN TRANSPARENT LENS, TAPE AND REEL.

THE SPECIFICATIONS MAY CHANGE AT ANY TIME WITHOUT NOTICE DUE TO NEW MATERIALS OR PRODUCT IMPROVEMENT.

CONFIDENTIAL INFORMATION
THE INFORMATION CONTAINED IN THIS DOCUMENT IS THE PROPERTY OF LUMEX INC. EXCEPT AS SPECIFICALLY AUTHORIZED IN WRITING BY LUMEX INC., THE HOLDER OF THIS DOCUMENT SHALL KEEP ALL INFORMATION CONTAINED HEREIN CONFIDENTIAL AND SHALL PROTECT SAME IN WHOLE OR IN PART FROM DISCLOSURE AND DISSEMINATION TO ALL THIRD PARTIES.

DATE:	02.07.12	DRAWN BY:	AB
PAGE:	1 OF 1	CHKD BY:	KF
SCALE:	NTS	APRVD BY:	KF
UNIT:	mm [INCH]	Pb	