UNCONTROLLED DOCUMENT

| PART NUMBER | SSL-LX5093SRD/D-TR | REV. | B |
|---|---|---|---|
| DATE | E.C.N. NUMBER AND REVISION COMMENTS | | REV. |
| 10.25.06 | E.C.N. #11148. | | A |
| 09.27.12 | E.C.N. #10BRDR. & REDRAWN. | | B |

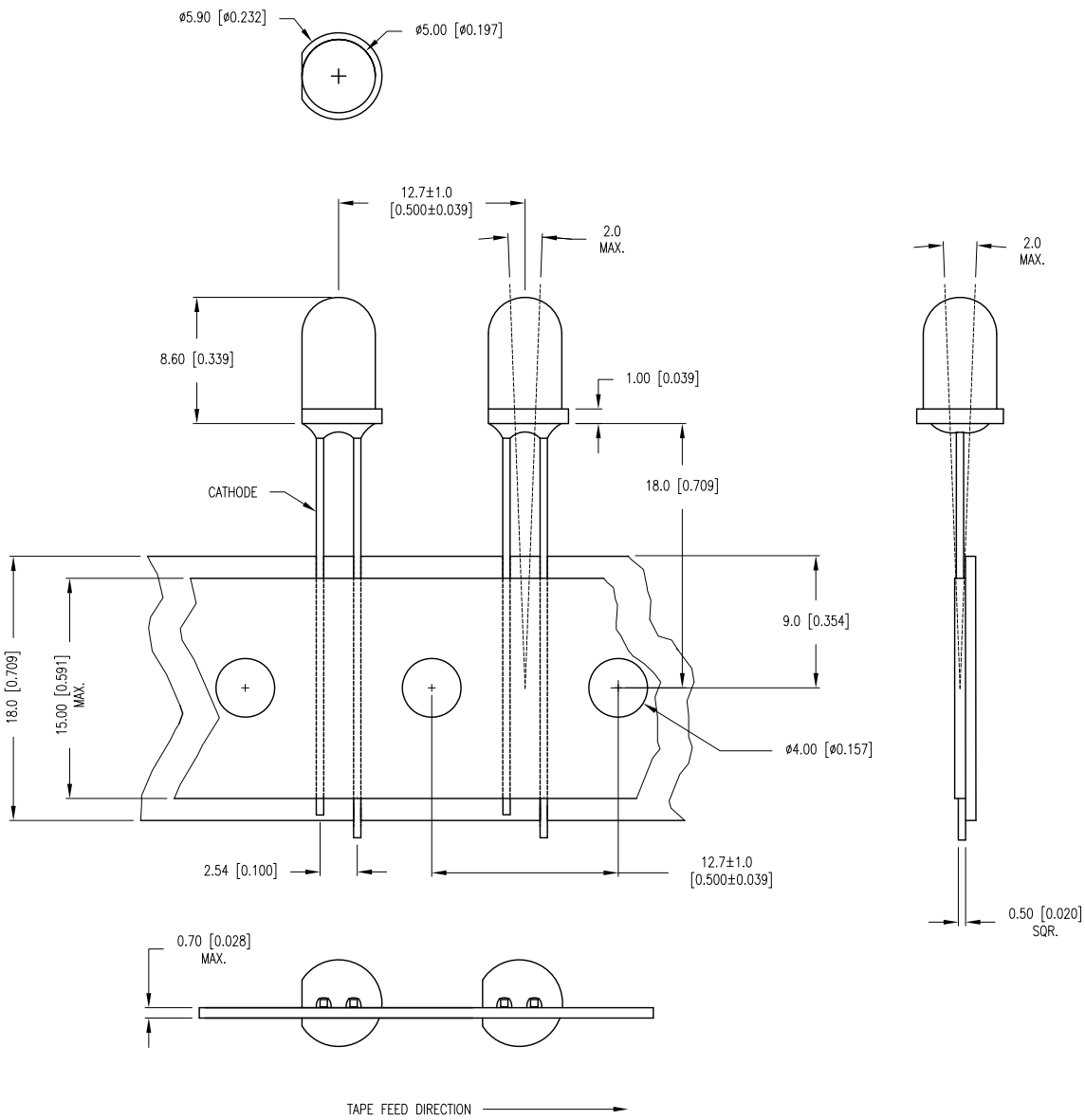


ELECTRO-OPTICAL CHARACTERISTICS Ta=25°C If=20mA

| PARAMETER | MIN | TYP | MAX | UNITS | TEST COND |
|---|---|---|---|---|---|
| PEAK WAVELENGTH | | 660 | | nm | |
| FORWARD VOLTAGE | | 1.7 | 2.2 | Vf | |
| REVERSE VOLTAGE | 5.0 | | | Vr | Ir=100µA |
| AXIAL INTENSITY | | 250 | | mcd | If=20mA |
| VIEWING ANGLE | | 60 | | 2x theta | |
| EMITTED COLOR: RED | | | | | |
| EPOXY LENS FINISH: RED DIFFUSED | | | | | |

LIMITS OF SAFE OPERATION AT 25°C

| PARAMETER | MAX | UNITS |
|---|---|---|
| PEAK FORWARD CURRENT* | 150 | mA |
| STEADY CURRENT | 30 | mA |
| POWER DISSIPATION | 75 | mW |
| DERATE FROM 25°C | -1.2 | mW/°C |
| OPERATING TEMP. | -40 TO +85 | °C |
| STORAGE TEMP. | -40 TO +85 | °C |
| SOLDERING TEMP. | +260 | °C |
| 2.0mm FROM BODY | 3 | SEC. |

* t<10µS

*UNLESS OTHERWISE SPECIFIED TOLERANCES PER DECIMAL PRECISION ARE: X=±1 (±0.039), X.X=±0.5 (±0.020), X.XX=±0.25 (±0.010), X.XXX=±0.127 (±0.005). LEAD SIZE=±0.05 (±0.002), LEAD LENGTH=±0.75 (±0.030). MIN= +DECIMAL PRECISION -0.00 MAX.= +0.00 -DECIMAL PRECISION

UNCONTROLLED DOCUMENT

LUMEX®
Creating LED and LCD Solutions Together™
425 N. GARY AVE.
CAROL STREAM, IL 60188-4900
PHONE: +1.800.278.5666
FAX: +1.630.315.2152
WEB: WWW.LUMEX.COM
MEMBER OF ITW PHOTONICS GROUP

QUASARBRITE T-5mm (T-1 3/4) 660nm SUPER RED LED, RED DIFFUSED LENS, TAPE & REEL.

**THE SPECIFICATIONS MAY CHANGE AT ANY TIME WITHOUT NOTICE DUE TO NEW MATERIALS OR PRODUCT IMPROVEMENT.**

CONFIDENTIAL INFORMATION
THE INFORMATION CONTAINED IN THIS DOCUMENT IS THE PROPERTY OF LUMEX INC. EXCEPT AS SPECIFICALLY AUTHORIZED IN WRITING BY LUMEX INC., THE HOLDER OF THIS DOCUMENT SHALL KEEP ALL INFORMATION CONTAINED HEREIN CONFIDENTIAL AND SHALL PROTECT SAME IN WHOLE OR IN PART FROM DISCLOSURE AND DISSEMINATION TO ALL THIRD PARTIES.

| | | | |
|---|---|---|---|
| DATE: | 09.27.12 | DRAWN BY: | AB |
| PAGE: | 1 OF 1 | CHKD BY: | KF |
| SCALE: | NTS | APRVD BY: | KF |
| UNIT: | mm [INCH] | Pb | |