PART NUMBER	SSL-LX5093UWW	REV	D

REV	E.C.N. NUMBER AND REVISION COMMENTS	DATE
A	E.C.N. #11283.	1.6.06
B	E.C.N. #11148	10.27.06
C	E.C.N. #11573	7.1.09
D	ECN-Lumex201700014	05.10.17

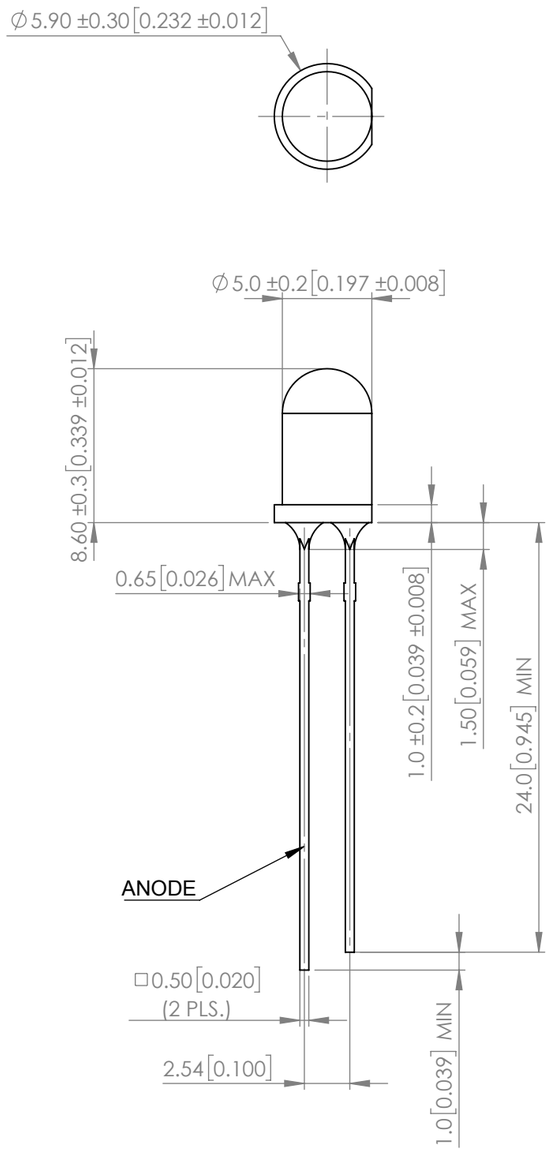

POLARITY

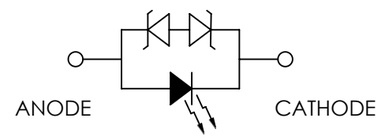

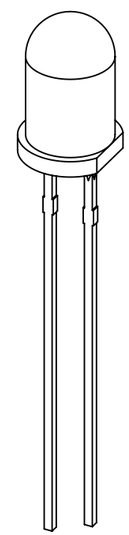

ELECTRO-OPTICAL CHARACTERISTIC TA=25℃

PARAMETER		MIN	TYP	MAX	UNITS	TEST COND
FORWARD VOLTAGE		-	3.2	-	Vf	If=20mA
REVERSE VOLTAGE		-	-	5	Vr	Ir=50uA
LUMINOUS INTENSITY		1800	-	3600	mcd	If=20mA
CHROMATICITY COORDINATES(*2)	X	-	0.30	-	-	If=20mA
	Y	-	0.29	-	-	
VIEWING ANGLE		-	70	-	2x theta1/2	If=20mA
EMITTED COLOR		WHITE				
EPOXY LENS FINISH		MILKY WHITE DIFFUSED				

***1.AXIAL INTENSITY TESTING CONDITION: 550nm WAVELENGTH.**
***2.THE ICI STANDARD COLORIMETRIC SYSTEM.**

ABSOLUTE MAXIMUM RATINGS TA=25℃

PARAMETER	MAX	UNITS
PEAK FORWARD CURRENT*	100	mA
FORWARD CURRENT	30	mA
POWER DISIPATION	110	mW
OPERATING TEMPERATURE	-40 TO +85	℃
STORAGE TEMPERATURE	-40 TO +100	℃
SOLDERING TEMPERATURE	3 SEC. MAX @ 260	℃

***t<10us**

CAUTION : STATIC DEVICE
FOLLOW PROPER E.S.D. HANDING PROCEDURES
WHEN WORKING WITH THIS PART

*UNLESS OTHERWISE SPECIFIED TOLERANCES PER DECIMAL PRECISION ARE: X=±1 (±0.039), X.X=±0.5 (±0.020), X.XX=±0.25 (±0.010), X.XXX=±0.127 (±0.005). LEAD SIZE=±0.05 (±0.002), LEAD LENGTH=±0.75 (±0.030). MIN= +DECIMAL PRECISION -0.00 MAX.= +0.00 -DECIMAL PRECISION

LUMEX® Creating LED and LCD Solutions Together™
425 N. GARY AVE.
CAROL STREAM, IL 60188
PHONE : 800-278-5666
FAX : 630-315-2150
WEB : WWW.LUMEX.COM

T-5mm (T-1) ULTRA WHITE LED, MILkY WHITE DIFFUSED LENS.

****THE SPECIFICATIONS MAY CHANGE AT ANY TIME WITHOUT NOTICE DUE TO NEW MATERIALS OR PRODUCT IMPROVEMENT.****

CONFIDENTIAL INFORMATION
THE INFORMATION CONTAINED IN THIS DOCUMENT IS THE PROPERTY OF LUMEX INC. EXCEPT AS SPECIFICALLY AUTHORIZED IN WRITING BY LUMEX INC., THE HOLDER OF THIS DOCUMENT SHALL KEEP ALL INFORMATION CONTAINED HEREIN CONFIDENTIAL AND SHALL PROTECT SAME IN WHOLE OR IN PART FROM DISCLOSURE AND DISSEMINATION TO ALL THIRD PARTIES.

DATE : 2017.05.10	DRAWN BY : C.C.
PAGE : 1 OF 1	CHKD BY : G.Y.
SCALE : NTF	APRVD BY : R.C.
UNIT : mm [INCH]	Pb