DCC DOCUMENT
ISSUE DATE:2022/01/17

WG57M– ① ② ③ ④ ⑤ – ⑥

SWITCH FUNCTION CODE	SWITCH FUNCTION DESCRIPTION
1	MECHANICAL,MOMENTARY,SOLDER TERMINAL
2	MECHANICAL,MAINTAIN,SOLDER TERMINAL
A	MECHANICAL,MOMENTARY, WIRELEADS
B	MECHANICAL,MAINTAIN,WIRELEADS

HOUSING MATERIAL CODE	HOUSING DECSRIPTION
1	ZINC ALLOY,VELOUR CHROME PLATED
3	ZINC ALLOY, MATT BLACK
4	STAINLESS STEEL, NATURAL

BUTTON TYPE CODE	BUTTON TYPE DESCRIPTION
0	NON.-ILLUMINATION
1	CENTER SPOT ILLUMINATION
2	RING ILLUMINATION
3	POWER/STANDBY SYMBOL ILLUMINATION

1. VELOUR CHROME / MATT BLACK / STAINLESS STEEL BUTTON SUPPLY FOR: NON-LIT. / RING ILL. / POWER ILL.
2. MIRROR BLACK BUTTON SUPPLY FOR: NON-LIT. / CENTER SPOT ILL.
3. HIGH BUTTON NON-ILLUMINATION ONLY SUPPLY FOR STAINLESS STEEL HOUSING.

LED COLOR CODE	LED COLOR
N	NONE
R	RED
A	AMBER
Y	YELLOW
B	BLUE
G	GREEN
W	WHITE
RB	RED/BLUE
RG	RED/GREEN
BG(*05)	BLUE/GREEN

"BG" ONLY SUPPLIED FOR INLET VOLTAGE 5V

LED INLET VOLTAGE CODE		LED INLET VOLTAGE
NON-WIRELEADS	IF BLANK*	FOLLOW LED SPECIFICATION
	05	5V
WIRELEADS	IF BLANK*	FOLLOW LED SPECIFICATION
	05	5V
	12	12V
	24	24V

ANY CODE	DESCRIPTION
IF BLANK*	NA
D	SHORT SLEEVE

MECHANICAL CHARACTERISTICS:

SWITCH CIRCUITRY: SPST-NO-DB (CONTACT FORM X)
SWITCH ACTION: MOMENTARY/MAINTAINED (PER CHART)
BUTTON TRAVEL: 2.3mm [.090inch] NOMINAL
OPERATING FORCE: 306g [3N] NOMINAL
PANEL THICKNESS: 0.5 - 6.0mm [.020 - .236inch]
SWITCH CONTACTS: SILVER
NUT TORQUE FORCE: 11.5 kgf-cm[MAX 10 LB-in]

ENVIRONMENTAL SPECIFICATIONS:
ACTUATOR INGRESS PROTECTION: IP67

OPERATING TEMPERATURE:
MOMENTARY: -40 to +85 °C[-40 to +185 °F]
MAINTAINED: -40 to +65 °C [-40 to +149 °F]

ELECTRICAL SPECIFICATIONS:
CURRENT RATINGS: 2A@24VDC

MOMENTRAY: 40K CYCLES NOMINAL
MAINTAINED: 20K CYCLES NOMINAL

DIELECTRIC STRENGTH: 1,000VAC
INSULATION RESISTANCE: 1G OHM
CONTACT RESISTANCE:
50m/250m OHMS MAX INITIAL(NON-WIRELEADS/WIRELEADS)

LED SPECIFICATIONS:
SEE LED SPECIFICATION

WIRELEADS SPECIFICATIONS:
AWG26 / UL1007
SWITCH WIRELEADS: BLUE

NOTE
1. CURRENT LIMITING RESISTOR IS REQUIRED TO LIMIT LED FORWARD CURRENT TO 20mA
2. SUPPLY HEX NUT AND SEALING WASHER BULK PACKED
3. INNER RESISTOR ONLY FOR LED :RED / BLUE / GREEN / WHITE.
4. THE FLAT SIDE OF HOUSING AND TERMINAL WILL NOT BE VERTICAL DUE TO THE MECHANISM IN G57M-X4XX.

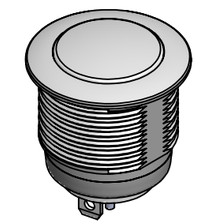

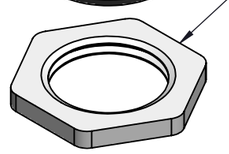

SEALING WASHER
T=0.80
(SUPPLIED IN BLUK)

SPECIAL HEX NUT
HEX 20.01, T=2.3
(SUPPLIED IN BLUK)

LED SPECIFICATION

LED CODE	LED SINGLE COLOR	Vf(VDC) TYP.	If (mA)	CIRCUITRY
R	RED	2.0	20	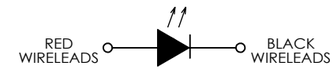
A	AMBER	2.0	20	
Y	YELLOW	2.0	20	
G	GREEN	3.0	20	
B	BLUE	3.1	20	
W	WHITE	3.3	20	

LED CODE	BICOLOR LED COLOR1	BICOLOR LED COLOR2	Vf(VDC) TYP.	If (mA)	CIRCUITRY
RB	RED	BLUE	2.0(RED) 3.3(BLUE)	20	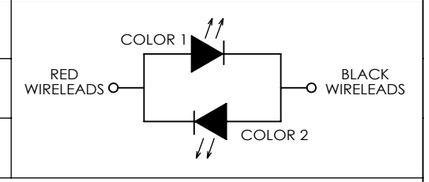
RG	RED	GREEN	2.0(RED) 3.4(GREEN)	20	
BG*05	BLUE	GREEN	5.0(BLUE) 5.0(GREEN)	20	

Notes:
Hand Soldering Temperature (4mmabove from Body) : 320°C for 3 seconds

DWG TYPE: SALES DRAWING	DRAWN: K.Y.	TOLERANCES: UNLESS OTHERWISE NOTED X.X ± 0.5 X.XX ± 0.2 ANGULAR ± 1°	DWG TITLE: WG57M-MECHANICAL MAINTAIN, NONE/CENTER SPOT/ POWER STANDBY SYMBOL ILLUMINATION
STATUS: RELEASE	REVIEW: a.H.		DWG NO.: WG57M-1,2,A,B
	APPROVED: v.w.	THIRD ANGLE PROJECTION	
	DATE: 2017/12/29	REF: 57M-1,2,5,6,A,B	

This document is the intellectual property of ITW Electronic Business Asia Co., Limited and may contain confidential, proprietary, privileged information protected by law. Neither this document nor any information it contains can be reproduced, transformed to any other format, or distributed, without written permission by ITW Electronic Business Asia Co., Limited.
本文件為安天傳百電股份有限公司之智慧財產，非經許可不得擷取、複製、轉變成其他形式使用或散佈

■ 管制文件
□ 非管制文件

Unit	SCALE	REV	
mm	3:2	3	RoHS Compliant

SHEET 1 OF 3

DCC DOCUMENT
ISSUE DATE:2022/01/17

NONE ILLUMINATION TYPE

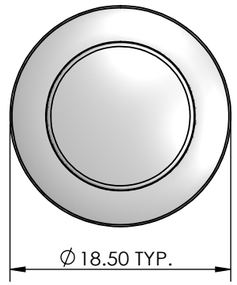

CENTER SPOT ILLUMINATION TYPE

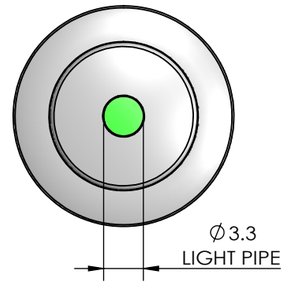

RING ILLUMINATION TYPE

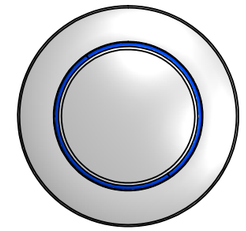

STANBY LOGO ILLUMINATION TYPE

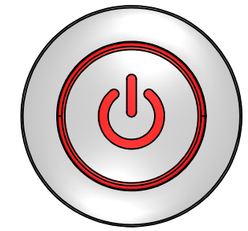

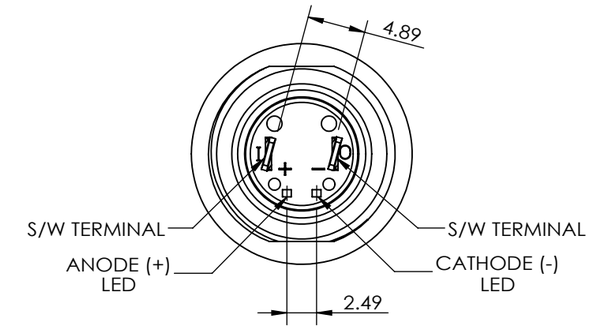

DETAIL FOR TERMINAL POSITION

NON ILLUMINATION SOLDER TERMINAL TYPE

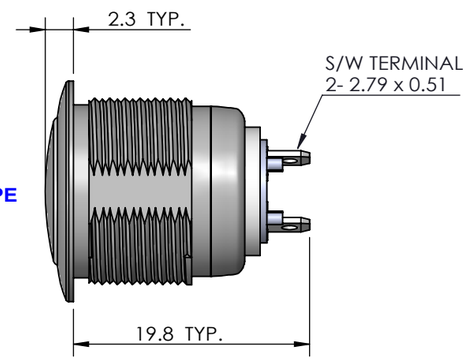

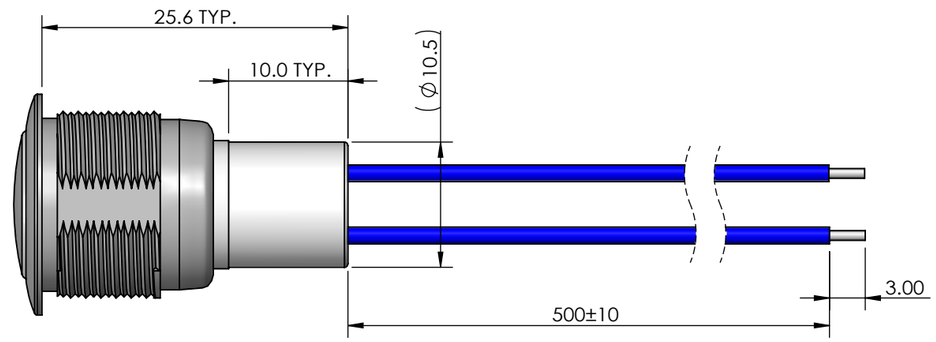

FLAT SIDE(ONLY FOR
POWER/STANDYBY
SYMBLO ALIGNMENT)

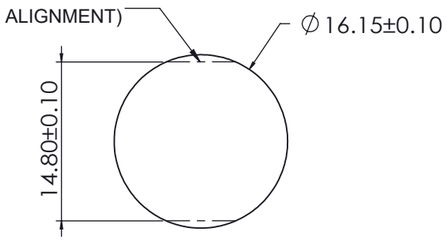

RECOMENDED PANEL CUT-OUT

ILLUMINATION SOLDER TERMINAL TYPE

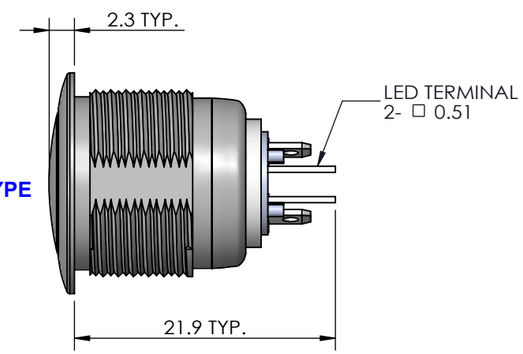

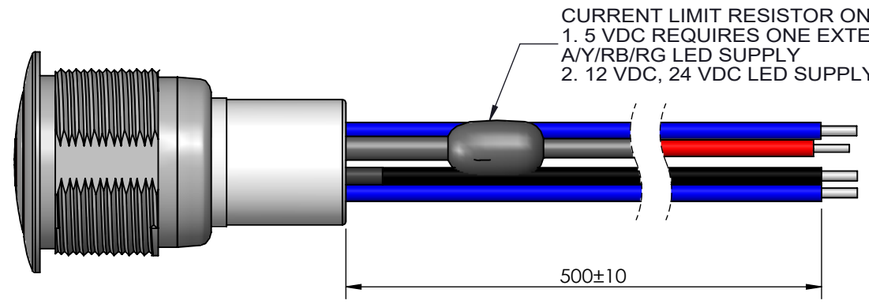

DWG TYPE: SALES DRAWING	DRAWN: K.Y.	TOLERANCES: UNLESS OTHERWISE NOTED X.X ± 0.5 X.XX ± 0.2 ANGULAR ± 1°	DWG TITLE: WG57M-MECHANICAL MAINTAIN, NONE/CENTER SPOT/ POWER STANDBY SYMBOL ILLUMINATION				ITW SWITCH LUMEX
STATUS: RELEASE	REVIEW: A.H.						
This document is the intellectual property of ITW Electronic Business Asia Co., Limited and may contain confidential, proprietary, privileged information protected by law. Neither this document nor any information it contains can be reproduced, transformed to any other format, or distributed, without written permission by ITW Electronic Business Asia Co., Limited. 本文件為安天德百電股份有限公司之智慧財產，非經許可不得擷取、複製、轉變成其他形式使用或散佈	APPROVED: V.W.	THIRD ANGLE PROJECTION	DWG NO.: WG57M-1,2,A,B				
	DATE: 2017/12/29	REF: 57M-1,2,5,6,A,B	■ 管制文件 □ 非管制文件	Unit: mm	SCALE: 3:2	REV: 3	RoHS Compliant / SHEET 2 OF 3