PART NUMBER	SSF-LXH240GID	REV	H

REV	E.C.N. NUMBER AND REVISION COMMENTS	DATE
A	CHG'D HOLDER BOTTOM&SAFE OPR. SPEC.	09.05.94
B	UPDATED SPECS.	11.29.94
C	CHG'D HOLDER BOTTOM	02.06.95
D	E.C.N #10100	10.05.95
E	E.C.N #10104	02.12.96
F	E.C.N #11148	12.07.06
G	E.C.N #10BRDR. & REDRAWN/#11729	06.23.11
H	ECN-Lumex202300001	01.04.23

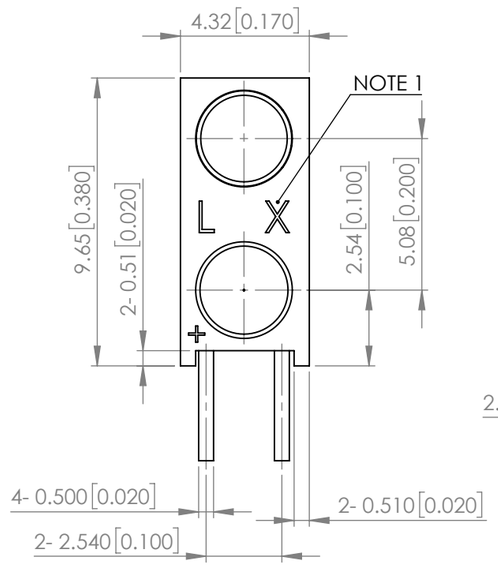

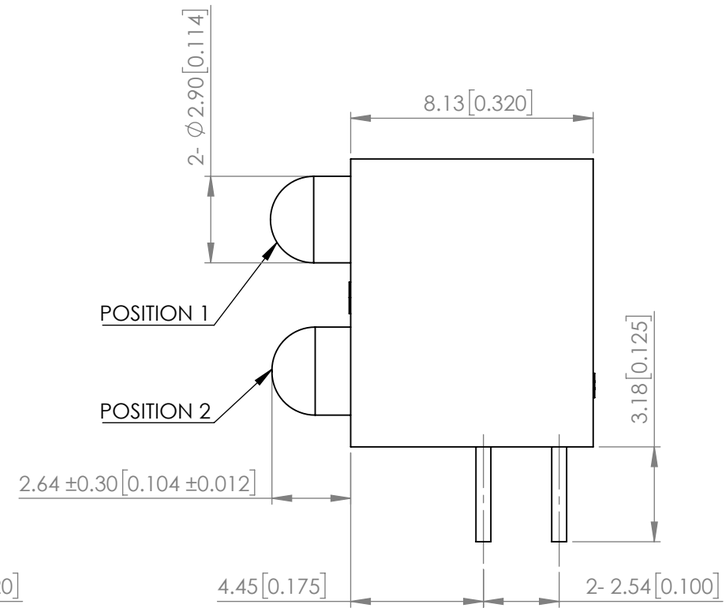

ELECTRO-OPTICAL CHARACTERISTIC TA=25℃

PARAMETER		MIN	TYP	MAX	UNITS	TEST COND
PEAK WAVELENGTH	G	-	565	-	nm	If=10mA
	R	-	630	-		
FORWARD VOLTAGE	G	-	2.0	2.4	Vf	If=10mA
	R	-	1.9	2.3		
REVERSE CURRENT		-	-	10	uA	VR=5V
LUMINOUS INTENSITY	G	-	25	-	mcd	If=10mA
	R	-	20	-		
VIEWING ANGLE		-	50	-	2x theta1/2	-
EMITTED COLOR		P1: GREEN / P2: RED				
EPOXY LENS FINISH		GREEN DIFFUSED / RED DIFFUSED				

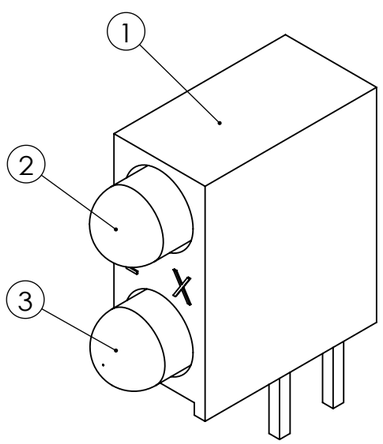

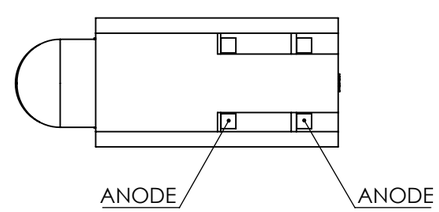

NOTE:
1."L X" OR "LUMEX"

ABSOLUTE MAXIMUM RATINGS TA=25℃

PARAMETER	MAX	UNITS
PEAK FORWARD CURRENT (G/R)*	140 / 160	mA
FORWARD CURRENT (G/R)	25 / 30	mA
REVERSE VOLTAGE (G/R)	5	V
POWER DISSIPATION (G/R)	60 / 70	mW
STORAGE TEMPERATURE	-40 TO +85	℃
OPERATING TEMPERATURE	-40 TO +85	℃
SOLDERING TEMP.	3 SEC. MAX @ 260	℃

*** t<10us**
**** 2.00mm FROM BODY**

ITEM NO.	PARTS	QTY.	DESCRIPTION
1	SSH-LXH240	1	BLACK NYLON 94V-0
2	SSL-LX3044GD	1	GREEN LED
3	SSL-LX3044ID	1	RED LED

*UNLESS OTHERWISE SPECIFIED TOLERANCES PER DECIMAL PRECISION ARE: X=±1 (±0.039), X.X=±0.5 (±0.020), X.XX=±0.25 (±0.010), X.XXX=±0.127 (±0.005). LEAD SIZE=±0.05 (±0.002), LEAD LENGTH=±0.75 (±0.030). MIN= +DECIMAL PRECISION -0.00 MAX.= +0.00 -DECIMAL PRECISION

LUMEX® Creating LED and LCD Solutions Together™
425 N. GARY AVE.
CAROL STREAM, IL 60188
PHONE : 800-278-5666
FAX : 630-315-2150
WEB : WWW.LUMEX.COM

9.65(H)*4.32(W)*10.77(D)mm, T-3mm(T-1) RIGHT ANGLE FAULT INDICATOR LED, GaP 565nm GREEN / GaAsP/GaP 630nm RED LED, GREEN DIFFUSED / RED DIFFUSED.

****THE SPECIFICATIONS MAY CHANGE AT ANY TIME WITHOUT NOTICE.****

CONFIDENTIAL INFORMATION
THE INFORMATION CONTAINED IN THIS DOCUMENT IS THE PROPERTY OF LUMEX INC. EXCEPT AS SPECIFICALLY AUTHORIZED IN WRITING BY LUMEX INC., THE HOLDER OF THIS DOCUMENT SHALL KEEP ALL INFORMATION CONTAINED HEREIN CONFIDENTIAL AND SHALL PROTECT SAME IN WHOLE OR IN PART FROM DISCLOSURE AND DISSEMINATION TO ALL THIRD PARTIES.

DATE : 2023.01.04	DRAWN BY : C.C.
PAGE : 1 OF 1	CHKD BY : E.C.
SCALE : NTF	APRVD BY : G.Y.
UNIT : mm [INCH]	Pb