PART NUMBER	SSF-LXH240GYD	REV	I

REV	E.C.N. NUMBER AND REVISION COMMENTS	DATE
A	CHG'D LEAD LENGTHS	08.09.93
B	CHG'D LEAD LENGTHS	08.27.93
C	CHG'D HOLDER BOTTOM&SAFE OPR. SPEC.	08.19.94
D	UPDATED SPECS	11.29.94
E	E.C.CHG'D HOLDER BOTTOM	02.06.95
F	E.C.N #10100	10.09.95
G	E.C.N #10104	02.12.96
H	E.C.N.#10BRDR & REDRAWN/#11729	06.14.11
I	ECN-Lumex202300002	01.04.23

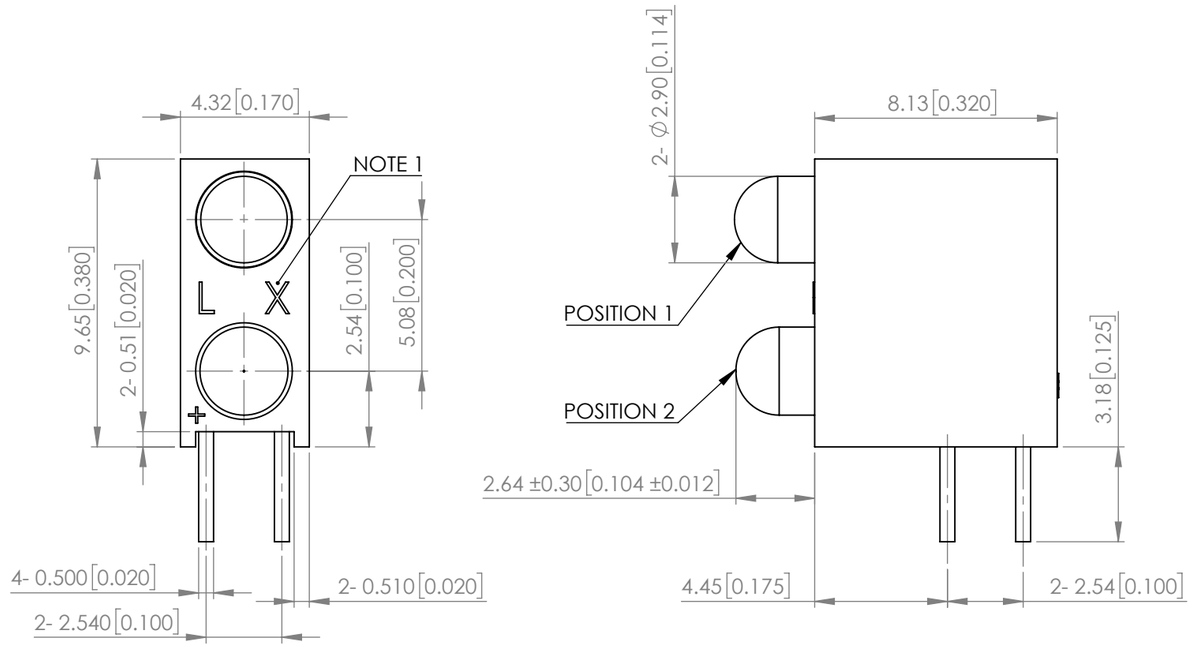

ELECTRO-OPTICAL CHARACTERISTIC TA=25℃

PARAMETER		MIN	TYP	MAX	UNITS	TEST COND
PEAK WAVELENGTH	G	-	565	-	nm	If=10mA
	Y	-	590	-		
FORWARD VOLTAGE	G	-	2.0	2.4	Vf	If=10mA
	Y	-	1.9	2.4		
REVERSE CURRENT		-	-	10	uA	VR=5V
LUMINOUS INTENSITY	G	-	25	-	mcd	If=10mA
	Y	-	15	-		
VIEWING ANGLE		-	50	-	2x theta1/2	-
EMITTED COLOR		P1: GREEN / P2: YELLOW				
EPOXY LENS FINISH		GREEN DIFFUSED / YELLOW DIFFUSED				

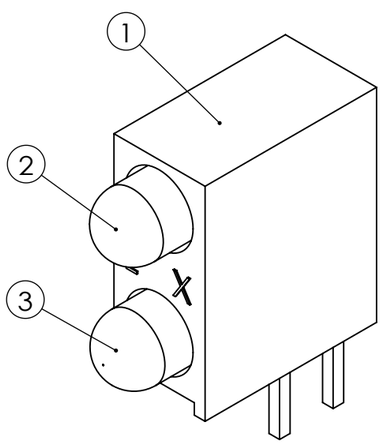

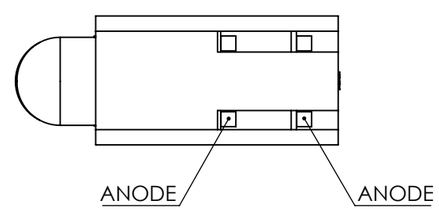

NOTE:
1."L X" OR "LUMEX"

ABSOLUTE MAXIMUM RATINGS TA=25℃

PARAMETER	MAX	UNITS
PEAK FORWARD CURRENT (G/Y)*	140 / 140	mA
FORWARD CURRENT (G/Y)	25 / 30	mA
REVERSE VOLTAGE (G/Y)	5	V
POWER DISSIPATION (G/Y)	60 / 75	mW
STORAGE TEMPERATURE	-40 TO +85	℃
OPERATING TEMPERATURE	-40 TO +85	℃
SOLDERING TEMP.	3 SEC. MAX @ 260	℃

*** t<10us**
**** 2.00mm FROM BODY**

ITEM NO.	PARTS	QTY.	DESCRIPTION
1	SSH-LXH240	1	BLACK NYLON 94V-0
2	SSL-LX3044GD	1	GREEN LED
3	SSL-LX3044YD	1	YELLOW LED

*UNLESS OTHERWISE SPECIFIED TOLERANCES PER DECIMAL PRECISION ARE: X=±1 (±0.039), X.X=±0.5 (±0.020), X.XX=±0.25 (±0.010), X.XXX=±0.127 (±0.005). LEAD SIZE=±0.05 (±0.002), LEAD LENGTH=±0.75 (±0.030). MIN= +DECIMAL PRECISION -0.00 MAX.= +0.00 -DECIMAL PRECISION

LUMEX® Creating LED and LCD Solutions Together™
425 N. GARY AVE.
CAROL STREAM, IL 60188
PHONE : 800-278-5666
FAX : 630-315-2150
WEB : WWW.LUMEX.COM

9.65(H)*4.32(W)*10.77(D)mm, T-3mm(T-1) RIGHT ANGLE FAULT INDICATOR LED, GaP 565nm GREEN / GaAsP/GaP 590nm YELLOW LED, GREEN DIFFUSED / YELLOW DIFFUSED.

****THE SPECIFICATIONS MAY CHANGE AT ANY TIME WITHOUT NOTICE.****

CONFIDENTIAL INFORMATION
THE INFORMATION CONTAINED IN THIS DOCUMENT IS THE PROPERTY OF LUMEX INC. EXCEPT AS SPECIFICALLY AUTHORIZED IN WRITING BY LUMEX INC., THE HOLDER OF THIS DOCUMENT SHALL KEEP ALL INFORMATION CONTAINED HEREIN CONFIDENTIAL AND SHALL PROTECT SAME IN WHOLE OR IN PART FROM DISCLOSURE AND DISSEMINATION TO ALL THIRD PARTIES.

DATE : 2023.01.04	DRAWN BY : C.C.
PAGE : 1 OF 1	CHKD BY : E.C.
SCALE : NTF	APRVD BY : G.Y.
UNIT : mm [INCH]	Pb